LEGEND
Gentleman
RACER 200
RACER 200
E
S P E

Content

GEN RACER - 01 - HEAD COMP.,CYLINDER
GEN RACER - 02 - CYLINDER COMP.
GEN RACER - 03 - VALVE ACTUATING MECHANISM
GEN RACER - 04 - CHAIN,TIMINGลิ้น
GEN RACER - 05 - CRANKCASE ASSY.
GEN RACER - 06 - (CRANKSHAFT COMP.
GEN RACER - 07 - ACTUATING MECHANISM ASSY.
GEN RACER - 08 - SPEED CONTROL MECHANISM ASSY.
GEN RACER - 09 - CLUTCH ASSY.
GEN RACER - 10 - LUBRICATING GEAR
GEN RACER - 11 - COVER COMP.,RIGHT CRANKCASE
GEN RACER - 12 - GENERATOR ASSY.
GEN RACER - 13 - COVER COMP.,LEFT CRANKCASE
GEN RACER - 14 - ELECTRIC STARTER ASSY
GEN RACER - 15 - LIGHTING
GEN RACER - 18 - HANDLE BAR
GEN RACER - 19 - FRONT FENDER, MIRROR
GEN RACER - 20 - FRONT SHOCK, STEERING
GEN RACER - 21 - FRONT WHEEL
GEN RACER - 22 - FRONT BRAKE
GEN RACER - 23 - REAR BRAKE
GEN RACER - 24 - REAR WHEEL
GEN RACER - 25 - TANK
GEN RACER - 26 - SEAT
GEN RACER - 28 - AIR GUIDE SLEEVE LOWER & BACKREST
GEN RACER - 30 - MUFFLER ASSY
GEN RACER - 31 - PILLION STEP & SUPPORT
GEN RACER - 32 - PROTECTOR
GEN RACER - 33 - SWING ARM, REAR SHOCK
GEN RACER - 35 - REAR FENDER & SIDE COVER
GEN RACER - 38 - MAIN CABLE, ELECTRICAL
GEN RACER - 39 FRAME
GEN RACER - 40 CARBURATOR, AIR CLEANER, RADIATOR
GEN RACER - 41 TOOL KIT
GEN RACER - 42 STICKER

HEAD COMP.,CYLINDER

GEN RACER - 01

PICTURE

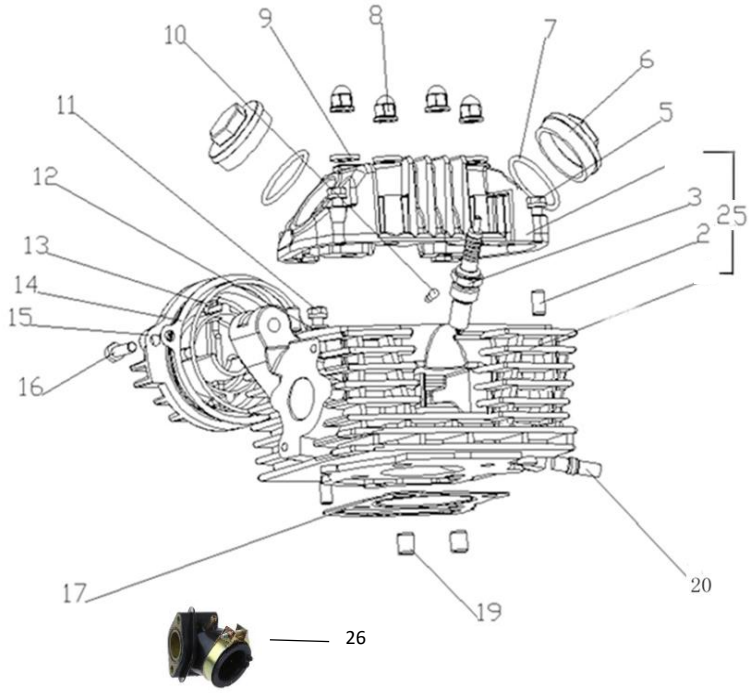

NO.	Parts No,	ENGLISH DESCRIPTION	QTY(pcs)	PRICE/PCS
2	CR5-01-02	PIN,DOWEL	2	¥100
3	CR5-01-03-TH	PLUG,SPARK	1	¥1,100
5	CR5-01-05	BOLT,HEXAGON FLANGE	4	¥200
6	CR5-01-06	CAP,TAPPET ADJUSTING HOLE	2	¥200
7	CR5-01-07-TH	RING,SEAL	2	¥200
8	CR5-01-08	ACORN NUT	4	¥100
9	CR5-01-09	WASHER,PLAIN	4	¥100
10	CR5-01-10	STOPPER	1	¥100
11	500-06-125	BOLT,HEXAGON FLANGE M6*125	1	¥200
12	CR5-01-12	WASHER,PLAIN	1	¥100
13	CR5-01-13	RING,SEAL	1	¥300
14	CR5-01-14	GASKET,CYLINDER HEAD LEFT SIDE COVER	1	¥100
15	CR5-01-15	COVER COMP.,CYLINDER HEAD LEFT SIDE	1	¥1,400
16	CR5-01-16	BOLT,HEXAGON FLANGE	2	¥100
17	CR5/200-01-17	GASKET,CYLINDER HEAD	1	¥900
19	CR5-01-19	PIN,DOWEL	2	¥100
20	CR5-01-20	STUD	2	¥200
25	CR5/200-01-25	CYLINDER HEAD KIT	1	¥21,000
26	GEN-01-26	AIR INLET	1	¥2,000

CYLINDER COMP.

GEN RACER - 02

PICTURE

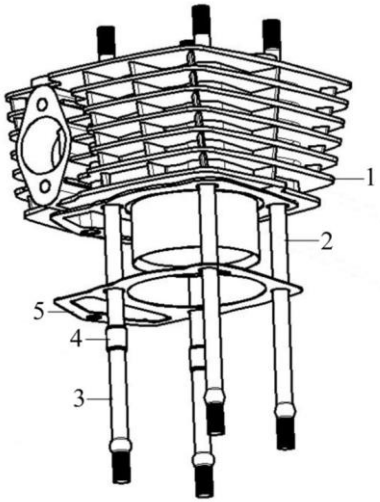

NO.	Parts No,	ENGLISH DESCRIPTION	QTY(pcs)	PRICE/PCS
1	CR5/200-02-01	BODY SET,CYLINDER	1	¥9,300
2	CR5/200-02-02	BOLT,STUD A	2	¥300
3	CR5/200-02-03	BOLT,STUD B	2	¥300
4	CR5-02-04	PIN,DOWEL	2	¥100
5	CR5-02-05	GASKET,CYLINDER	1	¥600

VALVE ACTUATING MECHANISM

GEN RACER - 03

PICTURE

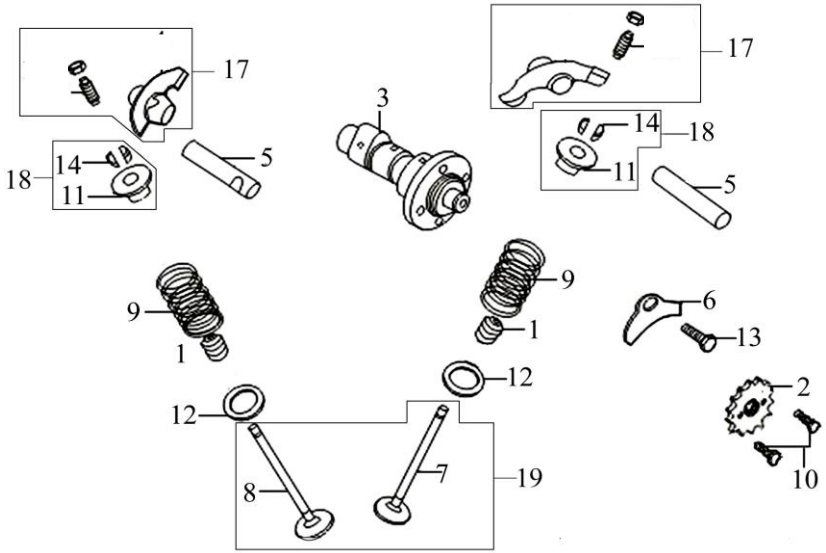

NO.	Parts No,	ENGLISH DESCRIPTION	QTY(pcs)	PRICE/PCS
1	CR5-03-01	SHIELD,OIL	2	¥300
2	CR5/200-03-02	SPROCKET,TIMING DRIVEN	1	¥700
3	CR5/200-03-03	CAMSHAFT ASSY.	1	¥3,600
5	CR5-03-05	SHAFT,VALVE ROCKER ARM	2	¥300
6	CR5-03-06	CHECK PLATE,VALVE ROCKER ARM SHAFT	1	¥100
7	CR5-03-07	VALVE,INLET	1	¥1,100
8	CR5-03-08	VALVE,EXHAUST	1	¥1,100
9	CR5-03-09	SPRING,VALVE(OUTER)	2	¥300
10	CR5-03-10	BOLT,HEXAGON	2	¥100
11	CR5-03-11	RETAINER,VALVE SPRING	2	¥200
12	CR5-03-12	SEAT,VALVE SPRING OUTER	2	¥100
13	CR5-03-13	SCREW,CROSS RECESSED COUNTERSUNK HEAD	1	¥100
14	CR5-03-14	COTTER,VALVE	4	¥200
17	CR5-03-17	ARM ASSY.,VALVE ROCKER	2	¥900
18	CR5-03-18	CLIP & VALVE SPRING SEAT KIT	2	¥400
19	CR5-03-19	VALVE KIT	1	¥2,200

CHAIN,TIMING

GEN RACER - 04

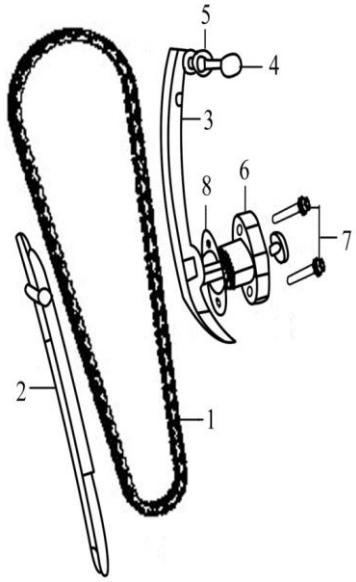

NO.	Parts No,	ENGLISH DESCRIPTION	QTY(pcs)	PRICE/PCS
1	CR5/200-04-01	CHAIN,TIMING	1	¥1,700
2	CR5/200-04-02	GUIDE PLATE,CHAIN	1	¥600
3	CR5/200-04-03	ADJUSTMENT PANEL,CHAIN	1	¥700
4	CR5-04-04	CLEVIS PIN,CHAIN ADJUSTMENT PANEL	1	¥200
5	CR5-04-05	WASHER,PLAIN	1	¥100
6	CR5-04-06	TENSIONER ASSY.,CAM CHAIN	1	¥1,400
7	CR5-04-07	BOLT,HEXAGON FLANGE	2	¥100
8	CR5-04-08	GASKET,CAM CHAIN TENSIONER	1	¥100

CRANKCASE ASSY.

GEN RACER - 05

PICTURE

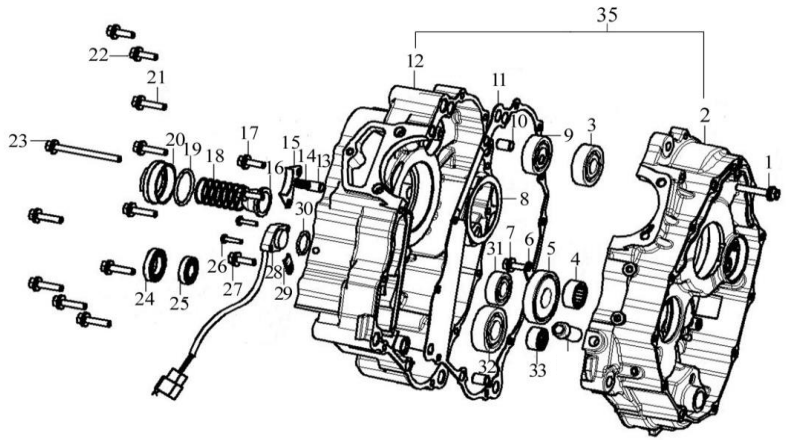

NO.	Parts No,	ENGLISH DESCRIPTION	QTY(pcs)	PRICE/PCS
1	CR5-05-01	BOLT,HEXAGON FLANGE M6*60	1	¥200
2	CR5-05-02	BODY SET,RIGHT CRANKCASE	1	¥9,800
3	CR5-05-03	BEARING 6203	1	¥1,400
4	CR5-05-04	BEARING HK212810	1	¥200
5	CR5-05-05	BEARING Φ55×Φ20×11	1	¥1,100
6	CR5-05-06	CHECK PLATE,MAINSHAFT BEARING	1	¥200
7	CR5/EFI-05-27	BOLT,HEXAGON M6x16	1	¥100
8	DEMG-05-08	GASKET,CRANKCASE Φ55×Φ71.5×1	1	¥300
9	CR5-05-09	BEARING 6303	1	¥1,600
10	CR5-05-10	PIN,DOWEL Φ10×14	2	¥100
11	CR5-05-11	GASKET,CRANKCASE	1	¥300
12	CR5-05-12	BODY SET,LEFT CRANKCASE	1	¥15,000
13	CR5-05-13	PRESSING PIN COMP.	1	¥100
14	CR5-05-14	SPRING,COMPRESSION	1	¥100
15	CR5-05-15	PLATE,TIMING CHAIN LIMIT	1	¥200
16	CR5-05-16	SCREEN,OIL STRAINER	1	¥200
17	CR5-03-10	BOLT,HEXAGON M6*10	2	¥100
18	CR5-05-18	SPRING,COMPRESSION	1	¥100
19	CR5-05-19	RING,SEAL Φ35×Φ3.0	1	¥100
20	CR5-05-20	CAP,TAPPET ADJUSTING HOLE	1	¥200
21	CR5-05-21	BOLT,HEXAGON FLANGE M6*50	8	¥200
22	CR5-05-22	BOLT,HEXAGON FLANGE M6*40	2	¥200
23	CR5-05-23	BOLT,HEXAGON FLANGE M6*90	1	¥200
24	CR5-05-24-TH	OIL SEAL Φ20×Φ34×7	1	¥600
25	CR5-05-25-TH	OIL SEAL Φ14×Φ28×7	1	¥400
26	CR5-05-26	SCREW,CROSS RECESSED PAN HEAD M4*18	2	¥100
27	CR5/EFI-05-07	BOLT,HEXAGON M6*12	1	¥100
28	CR5-05-28	SWITCH COMP.,GEAR INDICATOR	1	¥700
29	CR5-05-29	DISC,TENSION	1	¥100
30	CR5-05-30	RING,SEAL Φ20×Φ2.5	1	¥100

CRANKCASE ASSY.

GEN RACER - 05

PICTURE

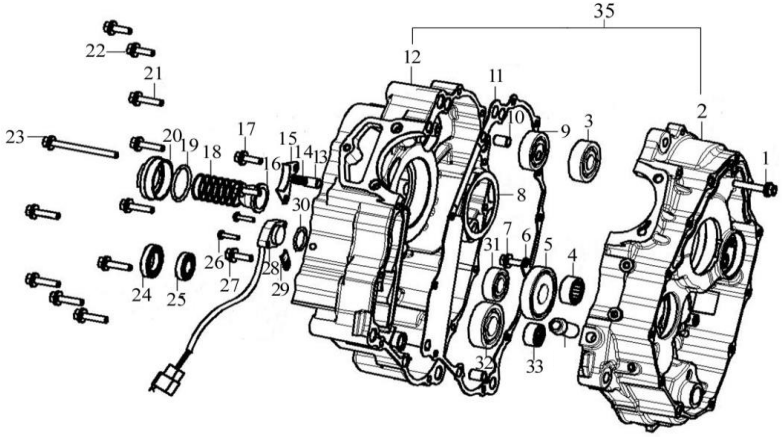

NO.	Parts No,	ENGLISH DESCRIPTION	QTY(pcs)	PRICE/PCS
31	GEN-05-31	BEARING 6202	1	¥600
32	CR5-05-32	BEARING 6204	1	¥700
33	CR5-05-33	BEARING NK152312	1	¥300
35	CR5-05-35	CRANKCASE KIT	1	¥24,000

CRANKSHAFT COMP.

GEN RACER - 06

PICTURE

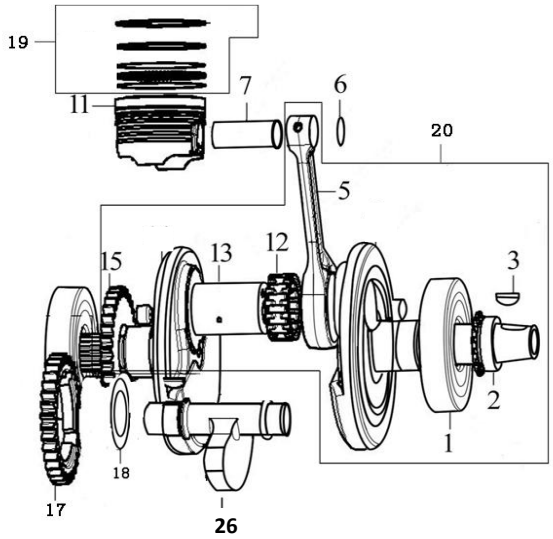

NO.	Parts No,	ENGLISH DESCRIPTION	QTY(pcs)	PRICE/PCS
1	CR5-06-01	BEARING	2	¥1,800
2	CR5/200-06-02	SPROCKET,TIMING DRIVE	1	¥1,100
3	CR5-06-03	KEY	2	¥400
5	CR5/200-06-05	ROD COMP.,CONNECTING	1	¥4,500
6	CR5/200-06-06	CHECK RING,STEEL CABLE BAFFLE	2	¥100
7	CR5/200-06-07	PIN,PISTON	1	¥200
11	CR5/200-06-11	PISTON COMP.	1	¥2,800
12	CR5-06-12	BEARING	1	¥900
13	CR5/200-06-13	PIN,CRANK	1	¥1,100
15	CR5-06-15	GEAR,BALANCING ARBOR DRIVE	1	¥3,900
17	CR5/200-06-17	GEAR,BALANCING ARBOR DRIVEN	1	¥6,000
18	223-06-1802	CHECK RING,SHOULDER	1	¥200
19	CR5/200-06-19	RING SET,PISTON	1	¥3,500
20	CR5/200-06-20	CRANKSHAFT COMP.	1	¥22,000
26	CR5-06-26	BALANCING ARBOR COMP.	1	¥6,500

ACTUATING MECHANISM ASSY.

GEN RACER - 07

PICTURE

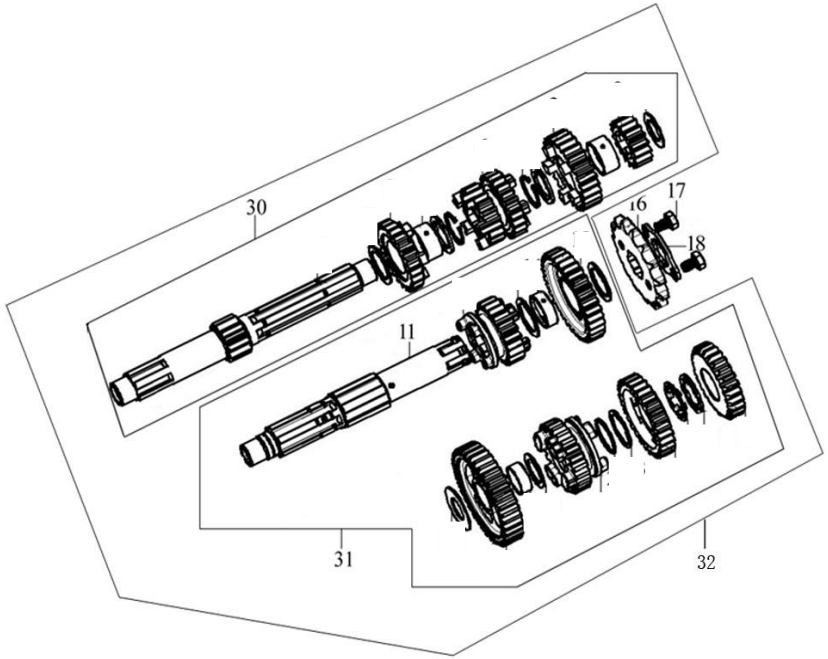

NO.	Parts No,	ENGLISH DESCRIPTION	QTY(pcs)	PRICE/PCS
11	GEN-07-11	COUNTERSHAFT	1	¥3,000
16	CR5-07-16-TH	SPROCKET,COUNTERSHAFT DRIVING	1	¥1,000
17	CR5-03-10	BOLT,HEXAGON	1	¥100
18	CR5-07-18	PLATE,COUNTERSHAFT DRIVING SPROCKET FIXING	1	¥200
30	CR5-07-30	MAINSHAFT COMP.	1	¥9,300
31	CR5-07-31	COUNTERSHAFT COMP.	1	¥14,000
32	LEG200-07-32	MAINSHAFT&COUNTERSHAFT KIT	1	¥23,000

SPEED CONTROL MECHANISM ASSY.

GEN RACER - 08

PICTURE

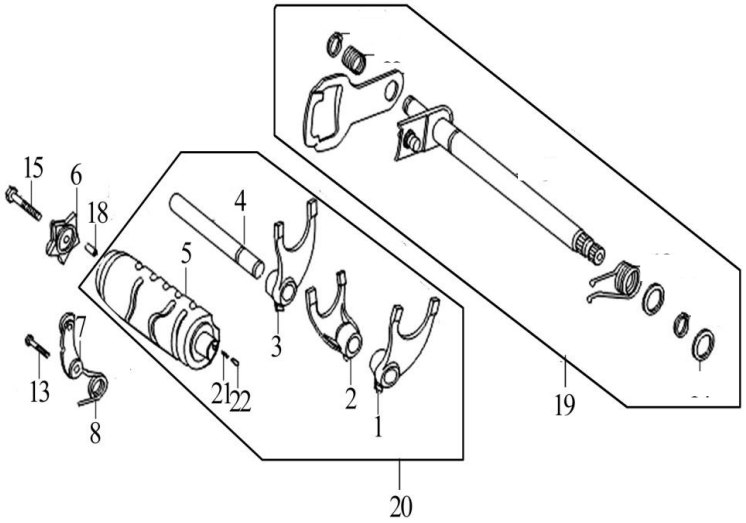

NO.	Parts No,	ENGLISH DESCRIPTION	QTY(pcs)	PRICE/PCS
1	CR5-08-01	FORK,GEAR SHIFT	1	¥1,400
2	CR5-08-02	FORK,GEAR SHIFT	1	¥1,400
3	CR5-08-03	FORK,GEAR SHIFT	1	¥1,400
4	CR5-08-04	SHAFT,SHIFT FORK GUIDE	1	¥900
5	CR5-08-05	DRUM COMP.,GEAR SHIFT	1	¥4,400
6	CR5-08-06	PLATE,DRUM STOPPER	1	¥700
7	CR5-08-07	CHECK PLATE ASSY.	1	¥300
8	CR5-08-08	SPRING,TORSIONAL	1	¥200
13	CR5-08-13	BOLT,HEXAGON M6*25	1	¥100
15	CR5-08-13	BOLT,HEXAGON M6*25	1	¥100
18	CR5-08-18	PIN,DOWEL	1	¥100
19	CR5-08-19	ARM COMP.,GEAR CHANGE	1	¥2,800
20	CR5-08-20	DRUM COMP.,GEAR SHIFT	1	¥9,000
21	CR5-08-21	SPRING,COMPRESSION	1	¥100
22	CR5-08-22	SHIFT CONTACT,GEAR INDICATOR SWITCH	1	¥100

CLUTCH ASSY.

GEN RACER - 09

PICTURE

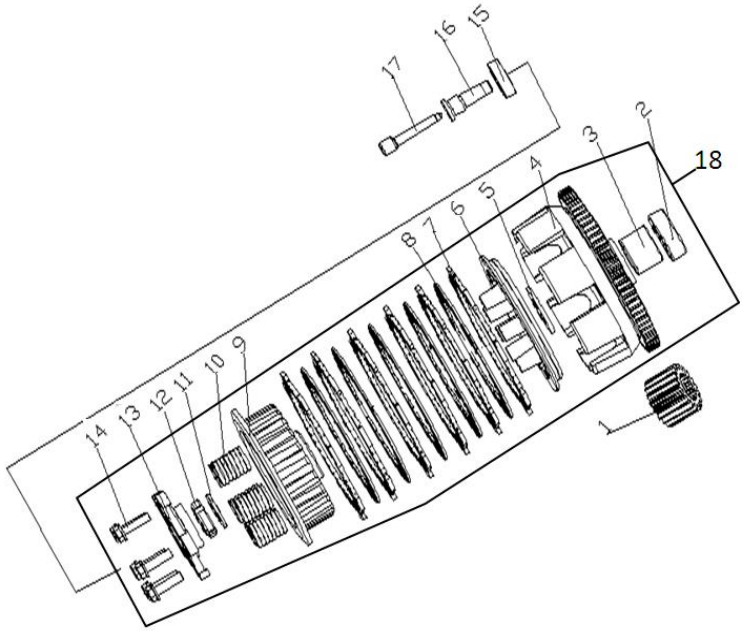

NO.	Parts No,	ENGLISH DESCRIPTION	QTY(pcs)	PRICE/PCS
1	CR5/200-09-01	GEAR,PRIMARY DRIVING	1	¥1,600
2	380822854-0001	COLLAR	1	¥200
3	380822855-0001	COLLAR	1	¥200
4	CR5/200-09-04	OUTER COMP.,CLUTCH	1	¥5,000
5	380500001-0001	WASHER,SPLINE	1	¥100
6	CR5/200-09-06	PLATE,CLUTCH PRESSURE	1	¥1,100
7	190430001-0001	DISK,CLUTCH FRICTION	6	¥700
8	CR5-09-08	PLATE,CLUTCH	5	¥400
9	CR5/200-09-09	CENTER COMP.,CLUTCH	1	¥1,500
10	CR5-09-10	SPRING,CLUTCH	6	¥300
11	CR5-09-11	WASHER,SAUCER	1	¥100
12	CR5-09-12	NUT,ROUND	1	¥100
13	CR5/200-09-13	PLATE,CLUTCH LIFTER	1	¥700
14	CR5-09-14	BOLT,HEXAGON FLANGE	6	¥100
15	CR5-09-15	BEARING	1	¥700
16	CR5-09-16	PUSH ROD	1	¥200
17	CR5-09-17	EJECT-ROD	1	¥200
18	CR5/200-09-18	CLUTCH KIT	1	¥16,000

LUBRICATING GEAR

PICTURE

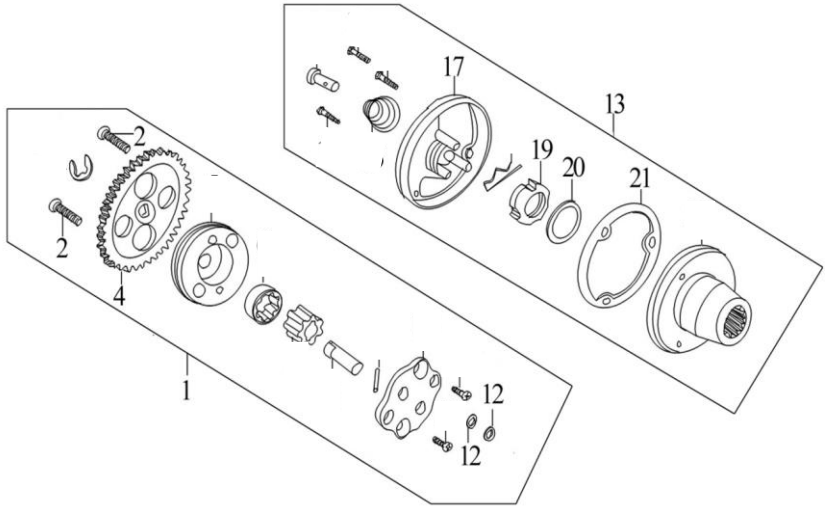

NO.	Parts No,	ENGLISH DESCRIPTION	QTY(pcs)	PRICE/PCS
1	CR5/200-10-01	PUMP ASSY.,OIL	1	¥3,100
2	CR5-10-02	SCREW,CROSS RECESSED COUNTERSUNK HEAD M6*30	2	¥100
4	CR5/200-10-04	SPROCKET,OIL PUMP DRIVEN	1	¥1,200
12	CR5-10-12	RING,SEAL	2	¥100
13	CR5-10-13	OIL FILTER ASSY.,SECONDARY	1	¥2,000
17	CR5-10-17	CAP,SECONDARY OIL FILTER	1	¥500
19	CR5-10-19	NUT,ROUND	1	¥200
20	CR5-10-20	WASHER,SAUCER	1	¥100
21	CR5-10-21	GASKET,OIL FILTER CAP	1	¥200

COVER COMP.,RIGHT CRANKCASE

PICTURE

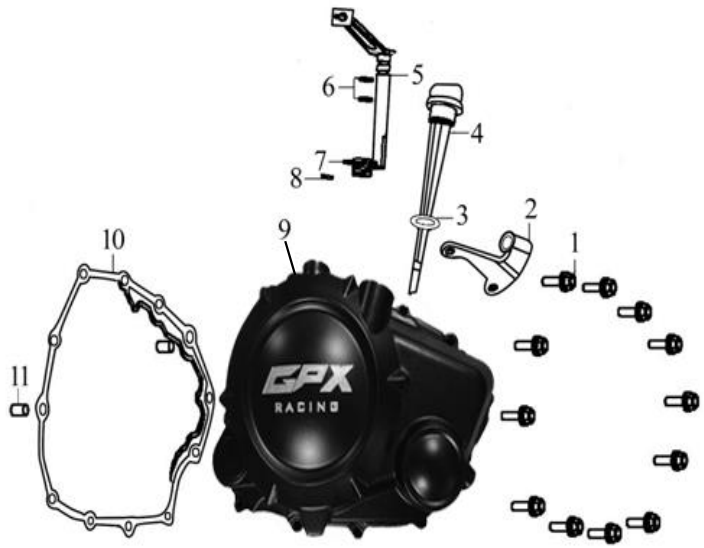

NO.	Parts No,	ENGLISH DESCRIPTION	QTY(pcs)	PRICE/PCS
1	CR5-11-01	BOLT,HEXAGON FLANGE M6*40	12	¥200
2	CR5-11-02	PLATE,CLUTCH CABLE LOCATING	1	¥200
3	CR5-11-03	RING,SEAL Φ18×Φ3-3.5	1	¥100
4	CR5-11-04	GAUGE COMP.,OIL LEVEL	1	¥300
5	CR5-11-05	JOYSTICK ASSY.,CLUTCH	1	¥700
6	CR5-11-06	RING,SEAL Φ8.8×Φ1.9	2	¥100
7	CR5-11-07	SPRING,TORSIONAL	1	¥100
8	CR5-11-08	BACKING PIN φ3.2×16	1	¥100
9	CR5/200-11-09	COVER COMP.,RIGHT CRANKCASE	1	¥8,800
10	CR5-11-10	GASKET,RIGHT CRANKCASE COVER	1	¥500
11	CR5-11-11	PIN,DOWEL φ8×14	2	¥100

GENERATOR ASSY.

GEN RACER - 12

PICTURE

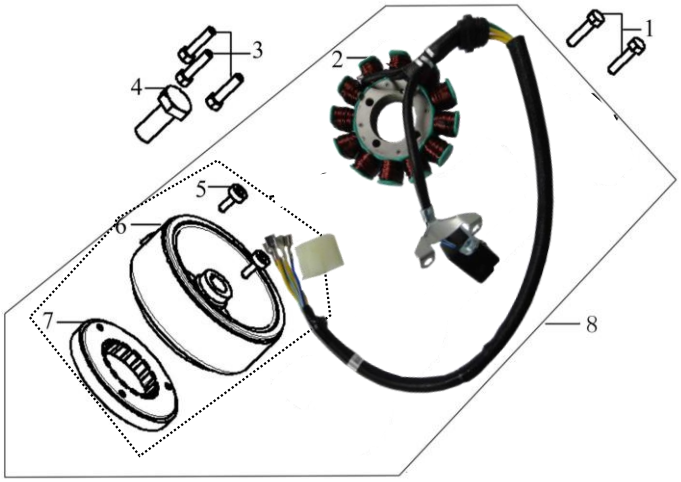

NO.	Parts No,	ENGLISH DESCRIPTION	QTY(pcs)	PRICE/PCS
1	CR5-12-01	BOLT,HEXAGON FLANGE M5*16	2	¥100
2	GEN-12-02	STATOR COMP.	1	¥7,600
3	CR5-12-03	BOLT,HEXAGON FLANGE M5*30	3	¥100
4	CR5-12-04	BOLT,HEXAGON FLANGE M10*35	1	¥100
5	CR5-12-05	SCREW,HEXAGON SOCKET	3	¥100
6	GEN-12-06	ROTOR COMP.	1	¥8,500
7	CR5/200-12-07	BODY ASSY.,STARTING CLUTCH	1	¥3,300
8	GEN-12-08	GENERATOR ASSY.	1	¥17,000

COVER COMP.,LEFT CRANKCASE

PICTURE

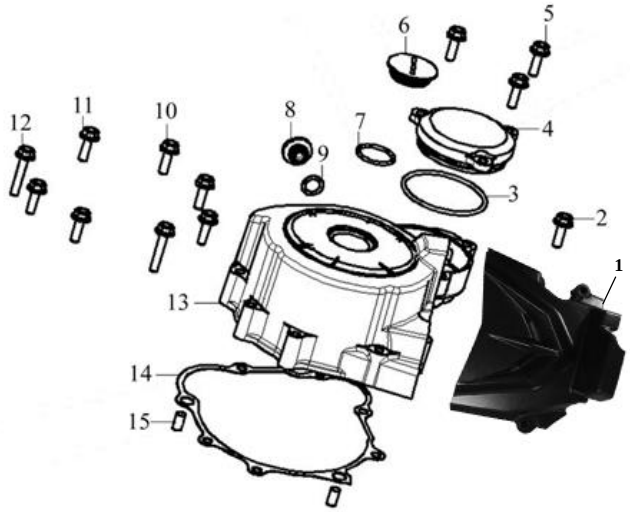

NO.	Parts No,	ENGLISH DESCRIPTION	QTY(pcs)	PRICE/PCS
1	GEN-13-01	COVER COMP.,LEFT REAR	1	¥3,300
2	CR5-13-02	BOLT,HEXAGON FLANGE M6*28	2	¥100
3	CR5-13-03	RING,SEAL Φ63×Φ3.0	1	¥200
4	CR5-13-04	COVER,GEAR CHAMBER	1	¥1,100
5	CR5-13-05	BOLT,HEXAGON FLANGE M6*20	3	¥100
6	CR5-13-06	COVER,LEFT DECORATING	1	¥200
7	CR5-13-07	RING,SEAL Φ27.4×Φ2.4	1	¥100
8	CR5-13-08	COVER,INSPECTION	1	¥200
9	CR5-13-09	RING,SEAL Φ13.8×Φ2.5	1	¥100
10	CR5-13-10	BOLT,HEXAGON FLANGE M6*25	1	¥100
11	CR5-13-11	BOLT,HEXAGON FLANGE M6*40	5	¥200
12	CR5-13-12	BOLT,HEXAGON FLANGE M6*50	2	¥200
13	CR5-13-13	COVER COMP.,LEFT FRONT	1	¥4,900
14	CR5-13-14	GASKET,LEFT FRONT COVER	1	¥400
15	CR5-13-15	PIN,DOWEL φ10×14	2	¥100

ELECTRIC STARTER ASSY

PICTURE

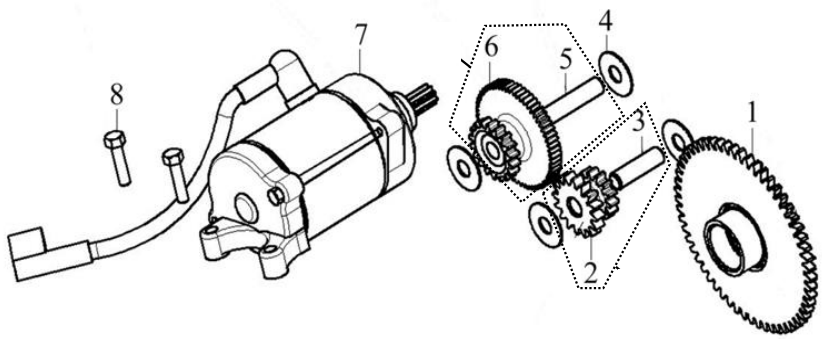

NO.	Parts No,	ENGLISH DESCRIPTION	QTY(pcs)	PRICE/PCS
1	CR5-14-01	DISK GEAR	1	¥1,700
2	GEN-14-02	GEAR IDLE,ELECTRIC STARTING	1	¥900
3	CR5-14-03	SHAFT ASSY.,DUPLEX GEAR	1	¥200
4	CR5-14-04	CHECK RING,SHOULDER	4	¥100
5	CR5-14-05	SHAFT ASSY.,DUPLEX GEAR	1	¥200
6	GEN-14-06	DUPLEX GEAR,ELECTRIC STARTING	1	¥1,700
7	GEN-14-07	MOTOR ASSY.,STARTING	1	¥9,800
8	CR5-14-08	BOLT,HEXAGON FLANGE M6*28	2	¥200

LIGHTING

GEN RACER - 15

NO	Parts No,	ENGLISH DESCRIPTION	QTY(pcs)	PRICE/PCS
1	GEN-18-01	LIGHT ASSY.,HEAD (GATO)	1	¥6,200
2	GEN-18-02	BULB,HEADLIGHT	1	¥1,000
3	GEN-18-08	METER ASSY.	1	¥21,000
4	GEN-18-07	CASE, METER	1	¥2,200
5	GEN-18-12	LIGHT, LEFT TURNING, Fr, Rr	1	¥3,000
6	GEN-18-11	LIGHT, RIGHT TURNING , Fr, Rr	1	¥3,000
7	GEN-18-14	TAIL LIGHT	1	¥4,700
8	GEN-18-15	LIGHT,REAR REGISTRATION PLATE	1	¥1,600
9	GEN-18-13	REAR REFLECTOR	1	¥300

HANDLE BAR

GEN RACER - 18

Picture

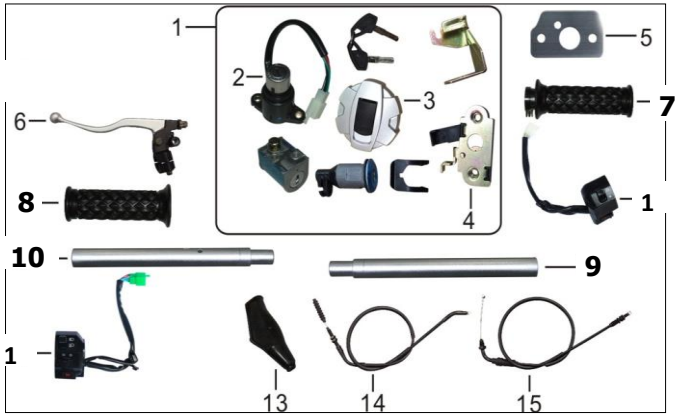

NO	Parts No,	ENGLISH DESCRIPTION	QTY(pcs)	PRICE/PCS
1	401-18-0103	LOCK KIT	1	¥10,000
2	401-18-0203	SWITCH ASSY.,IGNITION	1	¥3,000
3	401-18-0303	LOCK,FUEL TANK	1	¥5,000
4	B7017A001	LOCK,SEAT	1	¥1,500
5	GEN-24-05	PLATE, FUEL TANK DECORATED (SEAT LOCK COVER)	1	¥300
6	GEN-24-06	CLUTH LEVER COMP.	1	¥2,200
7	GEN-24-07	SLEEVE, HANDLE RUBBER	1	¥600
8	GEN-24-08	THROTTLE PARTS	1	¥800
9	401-18-0903	PIPE COMP.,STEERING HANDLE,L	1	¥8,000
10	401-18-1003	PIPE COMP.,STEERING HANDLE,R	1	¥8,000
11	401-18-1103	LEFT SWITCH ASSY.	1	¥4,500
12	401-18-1203	RIGHT SWITCH ASSY.	1	¥4,500
13	GEN-24-14	COVER,CLUTH CABLE	1	¥200
14	GEN-24-15	CLUTCH CABLE	1	¥900
15	401-18-1503	THROTTLE CALBE ASSY.	1	¥1,500

FRONT FENDER, MIRROR

GEN RACER - 19

NO	Parts No,	ENGLISH DESCRIPTION	QTY(pcs)	PRICE/PCS
1	223-19-0102-SGRED	FRONT FENDER- SEMI GLOSS RED	1	¥6,400
1	223-19-0102-SGBLK	FRONT FENDER- SEMI GLOSS BLK	1	¥6,400
2	223-19-0302	FRONT FENDER BRACKET-BLK,RH	1	¥3,500
3	223-19-0402	FRONT FENDER BRACKET-BLK,LH	1	¥3,500
4	223-19-0502	REAR BRACKET, FRONT FENDER-BLK,RH	1	¥3,500
5	223-19-0602	REAR BRACKET, FRONT FENDER-BLK,LH	1	¥3,500
6	GEN-30-06	SURROUNDING,NECK RIGHT	1	¥1,000
7	GEN-30-07	SURROUNDING,NECK LEFT	1	¥1,000
8	401-19-0803	REARVIEW MIRROR	2	¥7,000
	500-10-012	BOLT	2	¥200

FRONT SHOCK, STEERING

GEN RACER - 20

Picture

NO	Parts No,	ENGLISH DESCRIPTION	QTY(pcs)	PRICE/PCS
1	401-20-0103	SHOCK ABSORBER.,RIGHT FRONT,RH	1	¥41,000
2	401-20-0203	SHOCK ABSORBER.,FRONT,LH	1	¥41,000
3	401-20-0303	PLATE, CONNECTING UPPER	1	¥21,000
4	401-20-0304	STEERING STEM ASSY.	1	¥16,000
5	401-20-0305	DIRECTION LOCK BLOCK	1	¥1,000
6	401-20-0306	BRACKET,METER	1	¥2,500
7	GEN-15-09	ACCESSROIES,STEERING STEM	1	¥1,000
8	GEN-15-08	BEARING,STEERING STEM	1	¥2,000
9	GEN-15-10	DECORATIVE COVER,FRONT FORK	1	¥1,000
10	401-20-1003	CAP SHOCK	1	¥4,000
11	223-20-1202	STICKER FOR CAP SHOCK	1	¥200

FRONT WHEEL

GEN RACER - 21

Picture

NO	Parts No,	ENGLISH DESCRIPTION	QTY(pcs)	PRICE/PCS
1	GEN-25-01-TH	TIRE,FRONT WHEEL	1	¥17,000
2	GEN-25-02-TH	TUBE,FRONT WHEEL	1	¥1,900
3	223-21-0302	FRONT WHEEL	1	¥36,000
4	223-21-0402	RIM,FRONT WHEEL	1	¥17,000
5	223-21-0502	HUB,FRONT WHEEL	1	¥11,000
6	223-21-0602	SPOKE,FRONT WHEEL OUTSIDE	18	¥2,100
7	223-21-0702	SPOKE,FRONT WHEEL INSIDE	18	¥2,100
8	GEN-25-08	BEARING,REAR WHEEL RIGHT	2	¥1,000
9	GEN-25-09	SHAFT,FRONT WHEEL	1	¥1,300
10	GEN-25-10	COLLAR	1	¥300
11	GEN-25-11	SPEED COUNTER	1	¥3,000
12	223-21-1202	CLAMP,WIRE 1	1	¥200
13	223-21-1302	CLAMP,WIRE 2	1	¥300
14	GEN-25-12	FRONT BRAKE DISK,LH	1	¥7,500
15	GEN-25-13	RIGHT DISH BRAKE TRAY	1	¥7,500

FRONT BRAKE

GEN RACER - 22

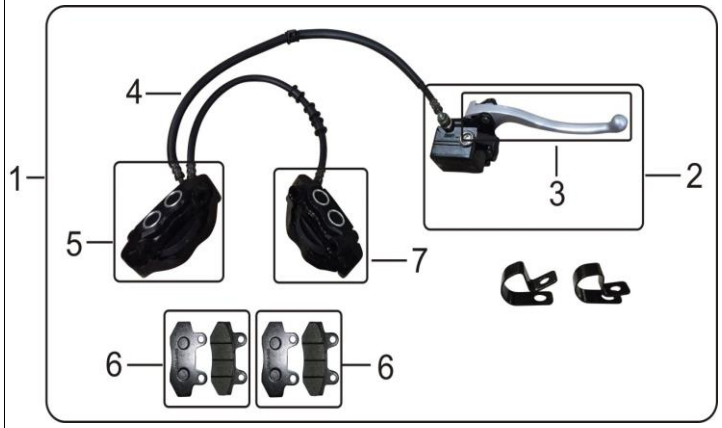

NO	Parts No,	ENGLISH DESCRIPTION	QTY(pcs)	PRICE/PCS
1	GEN-27-01	DISC-BRAKE ASSY.,FRONT	1	¥32,000
2	GEN-27-02	CYLINDER ASSY.,MASTER	1	¥7,500
3	GEN-27-03	LEVER,RIGHT DISC-BRAKE	1	¥1,800
4	GEN-27-04	DISC-BRAKE TUBE	1	¥6,000
5	GEN-27-05	CALIPER ASSY., RH	1	¥11,000
6	GEN-27-06	PAD COMP.,FRONT DISC-BRAKE	2	¥3,000
7	GEN-27-07	CALIPER ASSY., LH	1	¥11,000

REAR BRAKE

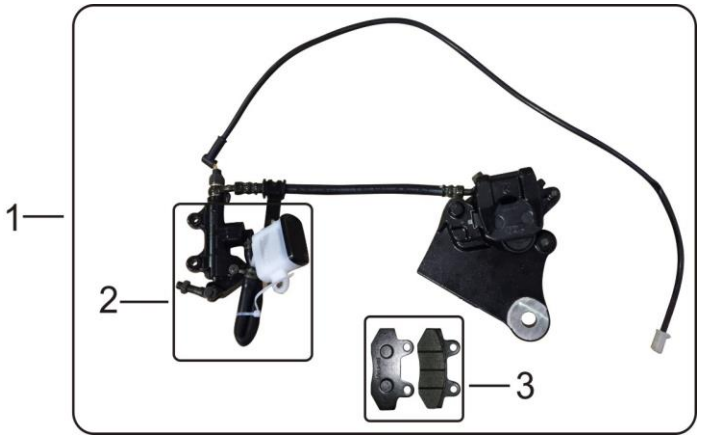

Picture	NO	Parts No,	ENGLISH DESCRIPTION	QTY(pcs)	PRICE/PCS
	1	GEN-28-01	DISC-BRAKE ASSY.,REAR	1	¥22,000
	2	GEN-28-02	DOWN DISC BRAKE	1	¥11,000
	3	GEN-28-03	PAD COMP.,REAR DISC-BRAKE	1	¥1,600

REAR WHEEL

GEN RACER - 24

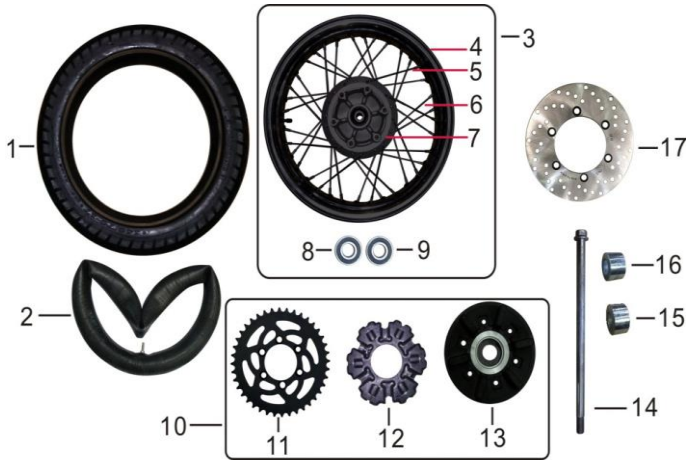

NO	Parts No,	ENGLISH DESCRIPTION	QTY(pcs)	PRICE/PCS
1	GEN-26-01-TH	TIRE,REAR WHEEL	1	¥24,000
2	GEN-26-02-TH	TUBE,REAR WHEEL	1	¥1,900
3	223-24-0302	REAR WHEEL ASSY.	1	¥38,000
4	223-24-0402	RIM,REAR WHEEL	1	¥19,000
5	223-24-0502	SPOKE,REAR WHEEL OUTSIDE	18	¥2,100
6	223-24-0602	SPOKE,REAR WHEEL INSIDE	18	¥2,100
7	223-24-0702	HUB,REAR WHEEL	1	¥17,000
8	GEN-26-08	BEARING,REAR WHEEL RIGHT	2	¥1,000
9	GEN-26-09	BEARING,REAR WHEEL RIGHT	2	¥1,000
10	GEN-26-10	IMPACT DAMPER COMP.	1	¥12,000
11	401-24-1102	SPROCKET,FINAL DRIVEN	1	¥3,600
12	GEN-26-12	BUMPING BLOCK,REAR WHEEL	1	¥1,100
13	223-24-1302	SEAT,SPROCKET WHEEL	1	¥5,600
14	GEN-26-14	REAR WHEEL SHAFT	1	¥1,000
15	GEN-26-15	COLLAR 32x15x17	1	¥300
16	GEN-26-16	COLLAR 28x15x18	1	¥300
17	GEN-26-17	REAR BRAKE DISC	1	¥6,000
18	GEN-26-18	BOLT FOR SPOKLET	6	¥200
19	GEN-26-19	NUT FOR SPOKLET	1	¥100
20	GEN-26-21	NUT FOR REAR WHEEL SHAFT	6	¥300
21	GEN-26-20	BOLT FOR REAR BRAKE DISC	6	¥200

TANK

GEN RACER - 25

Picture	NO	Parts No,	ENGLISH DESCRIPTION	QTY(pcs)	PRICE/PCS
	1	401-25-0103-SGRED	FUEL TANK BODY, SEMI GLOSS RED	1	¥32,000
	1	401-25-0103-SGBLK	FUEL TANK BODY, SEMI GLOSS BLK	1	¥32,000
	2	GEN-23-02	RUBBER JACKET,FUEL TANK PROP	2	¥200
	3	223-25-0302-401	LEFT FUEL TANK TRIM COVER-BLK GTM R	1	¥2,500
	4	223-25-0402-401	RIGHT FUEL TANK TRIM COVER-BLK GTM R	1	¥2,500
	5	GEN-23-05	SWITCH ASSY., FUEL	1	¥1,600
	6	223-25-0602	OIL SWITCH GASKET	1	¥200
	7	GEN-23-07	PAD,FUEL TANK CUSHION	2	¥200
	8	GEN-23-08	DECORATIVE BLOCK 3,FUEL TANK	1	¥100
	9	223-25-0902	COVER,FUEL TANK UPPER DECORATIVE-BLK	1	¥1,000
	10	GEN-23-10	DECORATIVE BLOCK 4,FUEL TANK	1	¥300
	11	GEN-23-11	DECORATIVE BLOCK 2,FUEL TANK	1	¥100
	12	223-25-1202	FUEL TANK COVER PLATE-BLK	1	¥300
	13	GEN-23-13	DECORATIVE BLOCK 1,FUEL TANK	1	¥100
	14	GEN-23-06	FUEL SENSOR	1	¥1,600
	15	GEN-23-14	SIDE RUBBER, FUEL TANK	4	¥200
	16	GEN-23-19	SIDE RUBBER, FUEL TANK 2	2	¥200
	17	GEN-23-15	CROSS RECESSED COUNTERSUNK HEAD SCREWS M3x5	5	¥100
	18	GEN-23-18	CROSS RECESSED COUNTERSUNK HEAD SCREWS M4x12	4	¥100
	19	GEN-23-17	BUSH	2	¥300
	20	GEN-23-16	HEXAGON FLANGE BOLTS M6x30	2	¥200

SEAT

GEN RACER - 26

Picture	NO	Parts No,	ENGLISH DESCRIPTION	QTY(pcs)	PRICE/PCS
	1	401-26-0103	SEAT,DRIVER	1	¥12,000
	2	223-26-0202	CABLE,SEAT	1	¥700
	3	GEN-17-03	BACKREST	1	¥1,000

AIR GUIDE SLEEVE LOWER & BACKREST

GEN RACER - 28

NO	Parts No,	ENGLISH DESCRIPTION	QTY(pcs)	PRICE/PCS
1	GEN-31-01	SHIELD,RADIATOR	1	¥800
2	GEN-31-02	AIR GUIDE SLEEVE, FRONT LOWER	1	¥1,000
3	223-28-0302-SGRED	AIR GUIDE SLEEVE,RIGHT LOWER-SEMI GLOSS RED	1	¥1,500
3	223-28-0302-SGBLK	AIR GUIDE SLEEVE,RIGHT LOWER-SEMI GLOSS BLK	1	¥1,500
4	223-28-0402-SGRED	AIR GUIDE SLEEVE,LEFT LOWER-SEMI GLOSS RED	1	¥1,500
4	223-28-0402-SGBLK	AIR GUIDE SLEEVE,LEFT LOWER-SEMI GLOSS BLK	1	¥1,500
5	GEN-31-05	BRACKET,LOWER AIR GUIDE SLEEVE	1	¥700
6	GEN-31-06	PLATE FENDER	1	¥1,500
7	223-28-0702-SGRED	CAP,BACKREST DECORATIVE-RED GTM R	1	¥6,500
7	223-28-0702-SGBLK	CAP,BACKREST DECORATIVE-BLK GTM R	1	¥6,500
	GEN-18-17	LIGHT ASSY.,HEAD (GATO) M6x12	2	¥200

MUFFLER ASSY

GEN RACER - 30

Picture

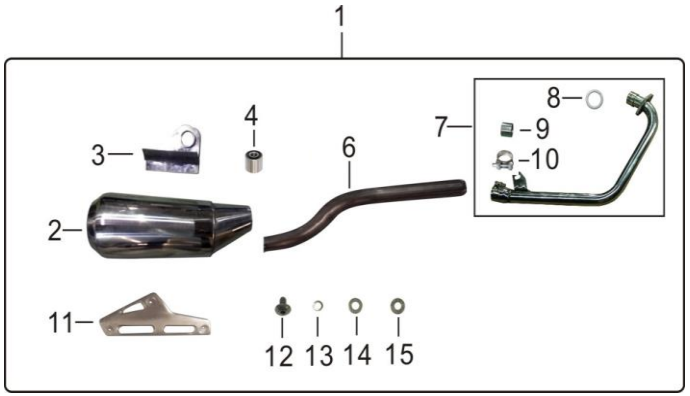

NO	Parts No,	ENGLISH DESCRIPTION	QTY(pcs)	PRICE/PCS
1	223-30-0102	MUFFLER ASSY.,EXHAUST	1	¥41,000
2	223-30-0202	BODY MUFFLER	1	¥22,000
3	223-30-0302	BRKT, MUFFLER RR	1	¥2,700
4	223-30-0402	BUSH FOR MUFFLER	1	¥600
6	223-30-0602	PIPE EXHAUST	1	¥3,300
7	223-30-0702	MUFFLER BODY	1	¥15,000
8	223-30-0802	GASKET,EXHAUST OPENING	1	¥400
9	223-30-0902	MUFFLER GASKET	1	¥300
10	223-30-1002	MUFFLER HOOP	1	¥1,500
11	223-30-1102	SHIELD,MUFFLER	1	¥2,600
12	502-06-10	HEXAGON SOCKET M6 x 10	3	¥200
13	223-30-1302	WASHER	3	¥200
14	223-30-1402	FLAT WASHER	3	¥100
15	223-30-1502	WASHER	3	¥200

PILLION STEP & SUPPORT

GEN RACER - 31

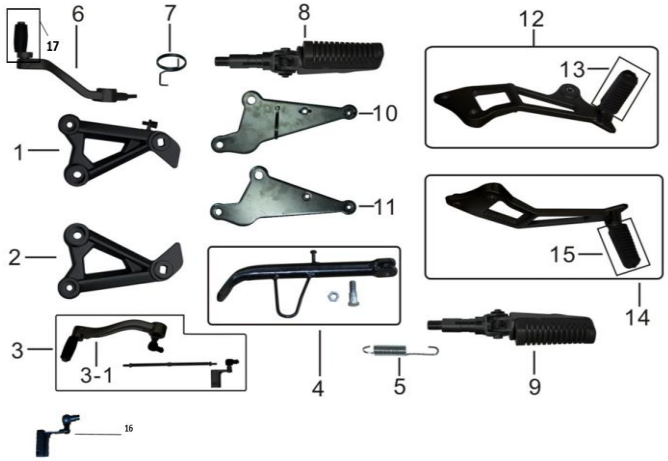

NO	Parts No,	ENGLISH DESCRIPTION	QTY(pcs)	PRICE/PCS
1	223-31-0102	ADAPTER PLATE,,PILLION STEP,RH	1	¥14,000
2	223-31-0202	ADAPTER PLATE,,PILLION STEP,LH	1	¥14,000
3	223-31-0302	PEDAL, SHIFTING	1	¥8,500
3-1	223-31-0402	BODY,GEAR CHANGE PEDAL	1	¥5,800
4	GEN-29-04	SIDE SUPPORT	1	¥1,200
5	GEN-29-05	SPRING,SIDE STAND	1	¥200
6	223-31-0702	PEDAL,REAR BRAKE	1	¥7,200
7	223-31-0802	RETURN SPRING,REAR BRAKE PEDAL	1	¥500
8	223-31-0902	MAIN FOOTREST SADDLE,RH	1	¥3,500
9	223-31-1002	MAIN FOOTREST SADDLE,LH	1	¥3,500
10	GEN-29-10	HOLD COMP.,RIGHT PILLION STEP	1	¥2,500
11	GEN-29-11	HOLD COMP.,LEFT PILLION STEP	1	¥3,000
12	223-31-1302	RIGHT PILLION STEP ASSY.	1	¥20,000
13	223-31-1402	STEP ASSY.,RIGHT PILLION	1	¥3,500
14	223-31-1504	AUXILIARY FOOTREST COMPONENTS,LEFT	1	¥20,000
15	223-31-1605	STEP ASSY.,LEFT PILLION	1	¥3,500
16	223-31-1602	SPLINE FITTING,SHIFTING PEDAL	1	¥2,000
17	223-31-1702	PADEL,SHIFTING & BRAKE(BLACK)	1	¥2,000

PROTECTOR

GEN RACER - 32

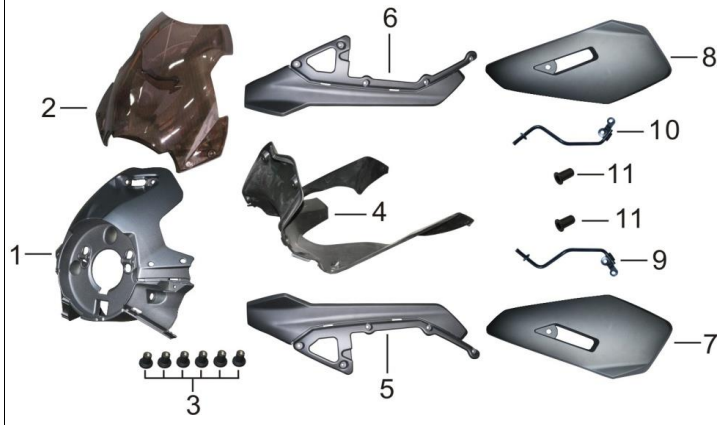

NO	Parts No,	ENGLISH DESCRIPTION	QTY(pcs)	PRICE/PCS
1	401-32-0103-SGRED	CASE,HEAD LIGHT-SEMI GLOSS RED	1	¥3,000
1	401-32-0103-SGBLK	CASE,HEAD LIGHT-SEMI GLOSS BLK	1	¥3,000
2	401-32-0203	WIND SHIELD	1	¥8,500
3	401-32-0303	RUBBER JACKET,WINDSHIELD	6	¥300
4	401-32-0403	LINING,AIR GUIDE SLEEVE	1	¥2,500
5	401-32-0503-SGRED	SIDE AIR GUIDE SLEEVE-SEMI GLOSS RED	1	¥4,000
5	401-32-0503-SGBLK	SIDE AIR GUIDE SLEEVE-SEMI GLOSS BLK	1	¥4,000
6	401-32-0603-SGRED	RIGHT SIDE AIR GUIDE-SEMI GLOSS RED	1	¥4,000
6	401-32-0603-SGBLK	RIGHT SIDE AIR GUIDE-SEMI GLOSS BLK	1	¥4,000
7	401-32-0703-SGRED	LEFT SIDE SHIELD BLACK-SEMI GLOSS RED	1	¥4,000
7	401-32-0703-SGBLK	LEFT SIDE SHIELD BLACK-SEMI GLOSS BLK	1	¥4,000
8	401-32-0803-SGRED	RIGHT SIDE SHIELD BLACK-SEMI GLOSS RED	1	¥4,000
8	401-32-0803-SGBLK	RIGHT SIDE SHIELD BLACK-SEMI GLOSS BLK	1	¥4,000
9	401-32-0903	SIDE AIR GUIDE SLEEVE BRACKET	1	¥3,500
10	401-32-1003	BRACKET,SIDE AIR GUIDE SLEEVE	1	¥2,000
11	401-32-1103	JACKET,HEAD LIGHT BRACKET DECORATIVE	2	¥100

SWING ARM, REAR SHOCK

GEN RACER - 33

Picture

NO	Parts No,	ENGLISH DESCRIPTION	QTY(pcs)	PRICE/PCS
1	GEN-16-01	FORK ASSY.,REAR	1	¥9,000
1-4	GEN-16-12	BUSH,REAR FORK CUSHION	2	¥2,000
2	GEN-16-02	SHAFT, REAR FORK	1	¥1,500
3	GEN-16-03	FLAT FORK DUST-PROOF COVER	1	¥1,000
4	GEN-16-04	SLIDER,DRIVE CHAIN	1	¥500
5	GEN-16-05-TH	REAR SHOCK ABSORBER	1	¥1,500
6	GEN-16-06	REAR CRADLE COMP	1	¥5,500
7	GEN-16-07-TH	CHAIN	1	¥6,000
8	GEN-16-08	CHAIN BOX	1	¥2,000
9	GEN-16-09	ADJUSTER,DRIVE CHAIN LEFT	2	¥1,000
10	GEN-16-10	STOPPER, CHAIN ADJUSTER	2	¥500
11	223-34-1102	PIN GB/T 97.1-2002_8_200	2	¥100
12	223-34-1202	WASHER, STANDARD SPRING GB/T 93-1987_8	2	¥100
13	502-08-055	HEXAGON SOCKET HEAD SCREWS M8x55	2	¥200
14	GEN-16-11	CRADLE COMP.,REAR	1	¥8,000
15	GEN-19-12	BOLT,ENGINE HANGER M10 x 1.25 x 60	1	¥500
16	GEN-19-13	BOLT,ENGINE HANGER M10 x 1.25 x 75	3	¥500
17	GEN-19-14	BOLT,ENGINE HANGER M10 x 1.25 x 95	1	¥500

REAR FENDER & SIDE COVER

GEN RACER - 35

NO	Parts No,	ENGLISH DESCRIPTION	QTY(pcs)	PRICE/PCS
1	GEN-32-01	REAR FENDER	1	¥900
2	401-27-0202	BLOCK,RIGHT SIDE COVER DECORATIVE	1	¥1,000
3	401-27-0302	RIGHT AUXILIARY PEDAL ASSY	1	¥4,500
4	401-27-0402	BLOCK,LEFT SIDE COVER DECORATIVE	1	¥1,000
5	401-27-0502	SIDE COVER,LEFT	1	¥4,500
6	GEN-32-06	PROTECTION PLATE,REAR FENDER	1	¥700
7	GEN-32-11	BRACKET,REAR FENDER	1	¥6,600
8	GEN-32-12	LINING,REAR FENDER	1	¥4,100
9	223-27-0902	LEFT DECORATION	1	¥6,200
10	GEN-32-09	BRACKET,REAR PLATE	1	¥400
11	223-32-1102	PLATE,ADVERTISEMENT	1	¥500
	507-06-012	Bolt	5	¥300

MAIN CABLE, ELECTRICAL

GEN RACER - 38

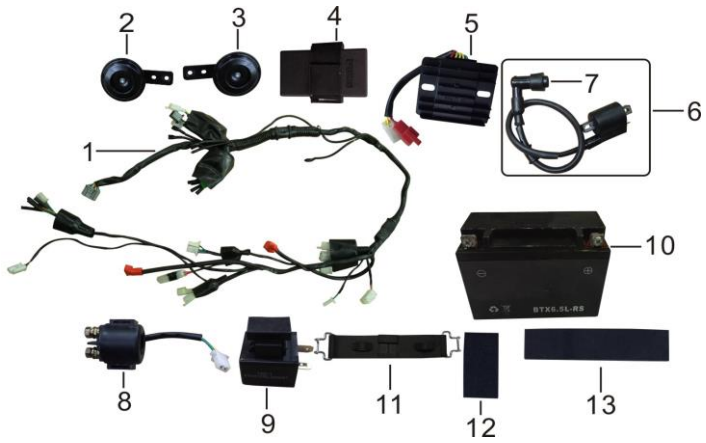

NO	Parts No,	ENGLISH DESCRIPTION	QTY(pcs)	PRICE/PCS
1	401-38-0103-TH	HARNESS,WIRE	1	¥8,500
2	GEN-20-02-TH	ALTHORN , LH	1	¥900
3	GEN-20-03-TH	SACKBUT ,RH	1	¥900
4	GEN-20-04	UNIT ASSY.,C.D.I.	1	¥2,000
5	GEN-20-05	RECTIFIER REGULATE ASSY.	1	¥2,900
6	GEN-20-06	IGNITION COIL	1	¥1,200
7	GEN-20-07	CAP,SPARK PLUG	1	¥600
8	GEN-20-08	START RELAY	1	¥1,200
9	GEN-20-09	FLASHER	1	¥1,000
10	GEN-20-10-TH	BATTERY ASSY.	1	¥8,600
11	GEN-20-11	BAND,BATTERY	1	¥500
12	GEN-20-12	BATTERY GASKET 20x40x3	1	¥100
13	GEN-20-13	BATTERY GASKET 20x85x3	1	¥100

FRAME

GEN RACER - 39

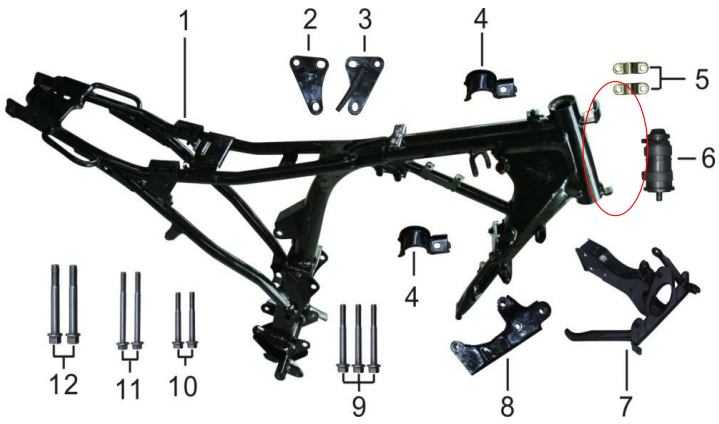

NO	Parts No,	ENGLISH DESCRIPTION	QTY(pcs)	PRICE/PCS
1	401-39-0103	FRAME ASSY.	1	¥110,000
2	GEN-19-02	PLATE,RIGHT UPPER ENGINE HANGER	1	¥700
3	GEN-19-03	PLATE, UPPER ENGINE HANGER	1	¥700
4	GEN-19-04	CLAMP,WIRE	2	¥200
5	GEN-19-09	CLIP,HEAD LIGHT	2	¥300
6	401-39-0603	CARBON CANISTER	1	¥6,000
7	401-39-0703	BRACKET,AIR GUIDE SLEEVE	1	¥7,500
8	GEN-19-11	ENGINE FRONT CONNECTING PLATE	1	¥2,400
9	GEN-19-15	BOLT,ENGINE HANGER M8x65	3	¥300
10	GEN-19-16	BOLT,ENGINE HANGER M8x60	2	¥300
11	GEN-19-17	BOLT,ENGINE HANGER M8x90	2	¥300
12	GEN-19-18	BOLT,ENGINE HANGER M10x1.25x115	2	¥300

CARBURATOR, AIR CLEANER, RADIATOR

GEN RACER - 40

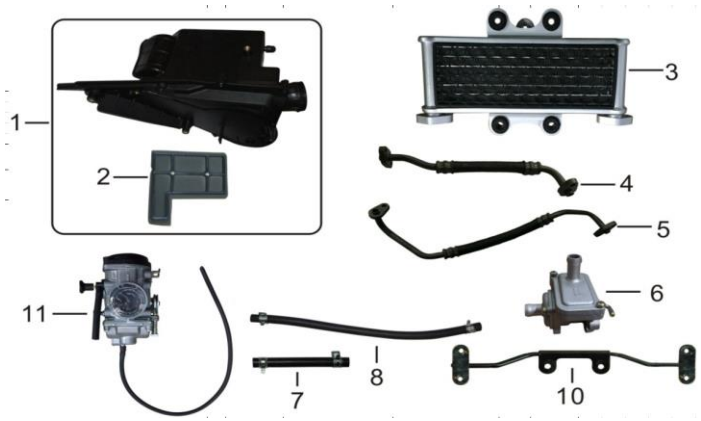

NO	Parts No,	ENGLISH DESCRIPTION	QTY(pcs)	PRICE/PCS
1	GEN-22-01	AIR CLEANER ASSY.	1	¥6,800
2	GEN-22-02	ELEMENT,AIR CLEANER	1	¥1,000
3	GEN-22-03	RADIATOR COMP.	1	¥21,000
4	GEN-22-04	PIPE,OIL COOLER I	1	¥4,500
5	GEN-22-05	PIPE,OIL COOLER II	1	¥4,600
6	GEN-22-06	VALVE,SECONDARY AIR INTAKE	1	¥3,500
7	401-40-0703	TUBE,BREATHER 1	1	¥1,500
8	401-40-0803	TUBE,BREATHER 2	1	¥1,000
10	401-40-1003	RADIATOR SUPPORT	1	¥2,000
11	401-40-1103	CARBURETOR ASSY.	1	¥32,000

TOOL KIT

GEN RACER - 41

Picture	NO	Parts No,	ENGLISH DESCRIPTION	QTY(pcs)	PRICE/PCS
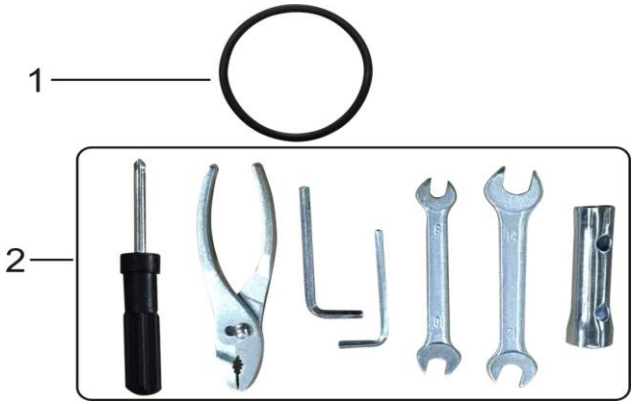	1	GEN-33-01	TRUCK TOOL STRAP	2	¥300
	2	GEN-33-02	ACCESSORIES,TOOL	1	¥1,500

STICKER

GEN RACER - 42

Picture

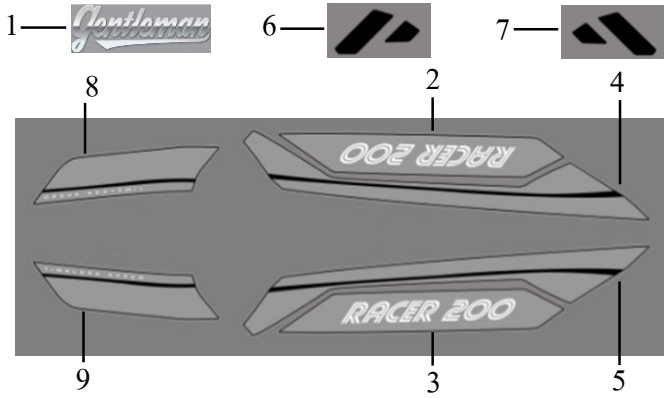

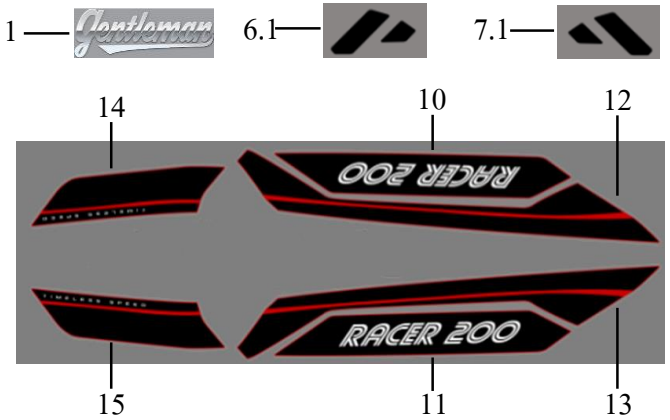

NO	Parts No,	ENGLISH DESCRIPTION	QTY(pcs)	PRICE/PCS
1	223-42-0102-TH	Emblem Gentleman	2	¥3,000
2	401-42-0203-TH	STICKER RACER200, Matt Black LH.	1	¥1,000
3	401-42-0303-TH	STICKER RACER200, Matt Black RH.	1	¥1,000
4	401-42-0403-TH	Patter Front Cover Matt Black LH	1	¥1,000
5	401-42-0503-TH	Patter Front Cover Matt Black RH	1	¥1,000
6	401-42-0603-TH	Patter Tank Cover LH	1	¥500
6.1	401-42-06.103-TH	Pattern Tank Cover,Rr LH GMRC	1	¥500
7	401-42-0703-TH	Patter Tank Cover RH	1	¥500
7.1	401-42-07.103-TH	Pattern Tank Cover,Rr RH GMRC	1	¥500
8	401-42-0803-TH	Patter Cap Backrest Matt Black LH	1	¥800
9	401-42-0903-TH	Patter Cap Backrest Matt Black RH	1	¥800
10	401-42-1003-TH	STICKER RACER200, Matt Red LH.	1	¥1,000
11	401-42-1103-TH	STICKER RACER200, Matt Red RH.	1	¥1,000
12	401-42-1203-TH	Patter Front Cover Matt Red LH	1	¥1,000
13	401-42-1303-TH	Patter Front Cover Matt Red RH	1	¥1,000
14	401-42-1403-TH	Patter Cap Backrest Matt Red LH	1	¥600
15	401-42-1503-TH	Patter Cap Backrest Matt Red RH	1	¥600