CYLINDER HEAD COMP.,

LEG150 FI-01

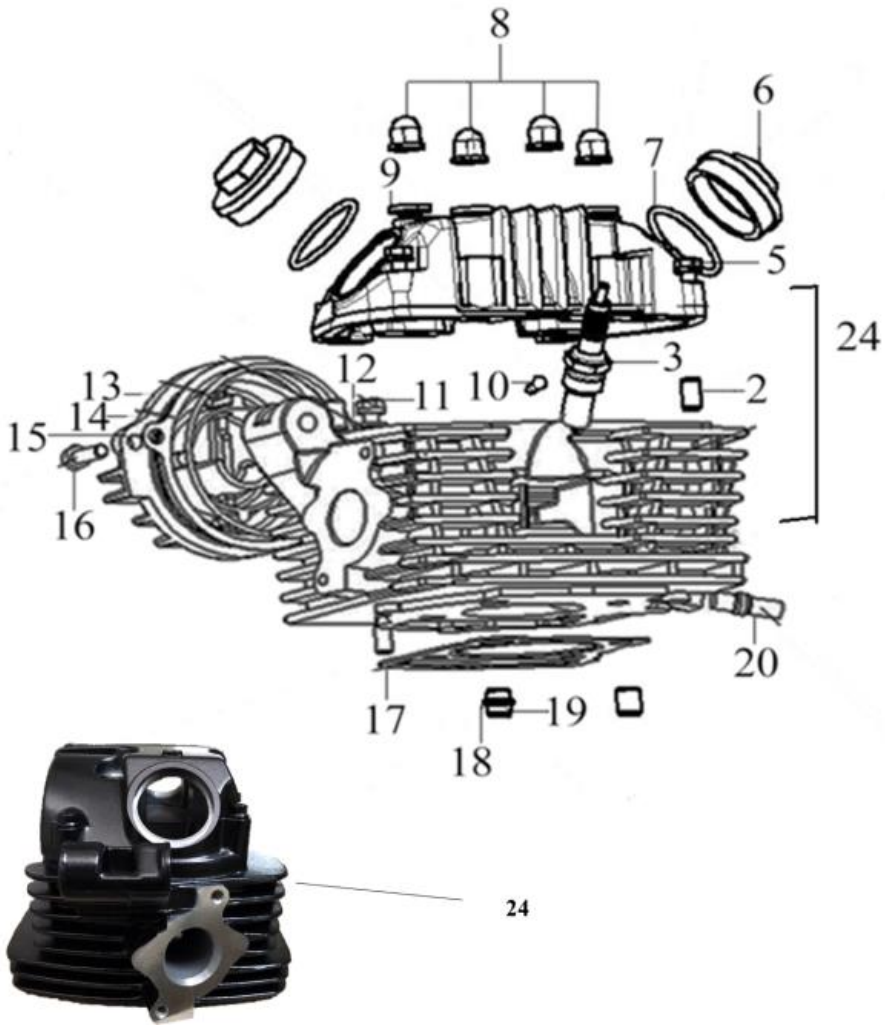

NO.	GPX CODE	ENGLISH DESCRIPTION	QTY (PCS)	Price (UNIT)
2	150-01-0201	DOWEL PIN	2	¥100
3	150-01-0301	SPARK PLUG	1	¥1,100
5	150-01-0501	HEXAGON FLANGE BOLT	4	¥200
6	150-01-0601	TAPPET ADJUSTING HOLE CAP	2	¥200
7	150-01-0701	SEAL RING	2	¥200
8	150-01-0801	ACORN NUT	4	¥100
9	150-01-0901	PLAIN WASHER	4	¥100
10	150-01-1001	STOPPER	1	¥100
11	150-01-1101	HEXAGON FLANGE BOLT	1	¥200
12	150-01-1201	WASHER,PLAIN	1	¥100
13	150-01-1301	SEAL RING	1	¥300
14	150-01-1401	CYLINDER HEAD LEFT SIDE COVER GASKET	1	¥100
15	150-01-1501	CYLINDER HEAD LEFT SIDE COVER COMP	1	¥1,400
16	150-01-1601	HEXAGON FLANGE BOLT,	2	¥100
17	150-01-1701	CYLINDER HEAD GASKET,	1	¥400
18	150-01-1801	SEAL RING,	1	¥100
19	150-01-1901	DOWEL PIN,	2	¥100
20	150-01-2001	STUD	2	¥200
24	150-01-2401	CYLINDER HEAD KIT	1	¥25,000

CYLINDER COMP.

LEG150 FI-02

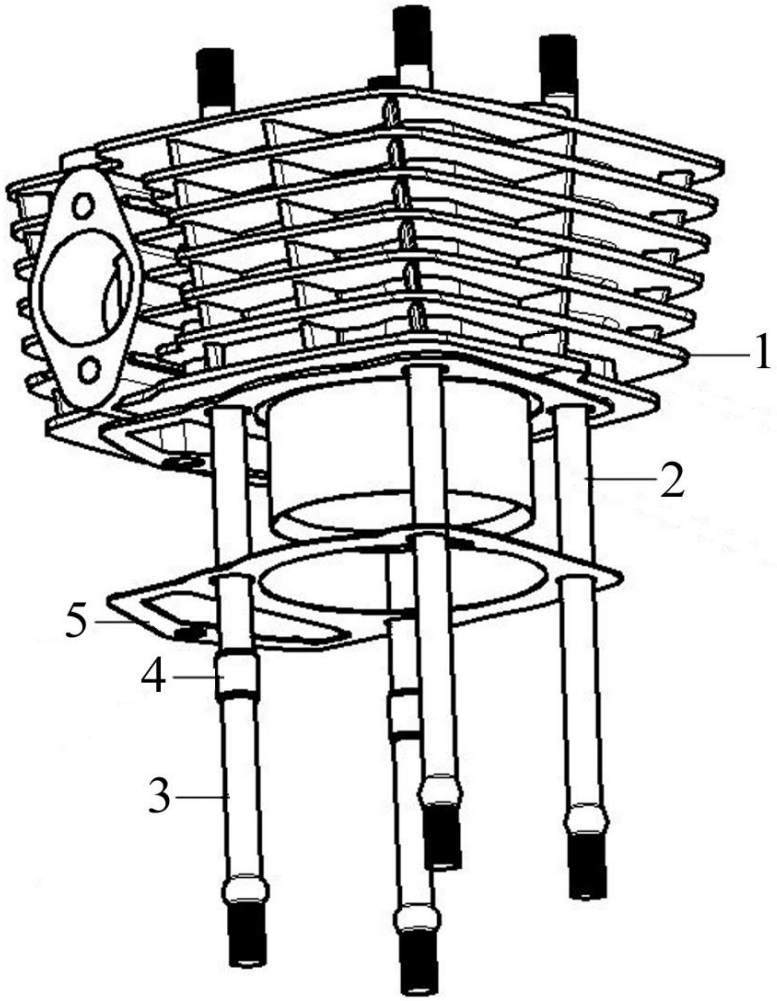

NO.	GPX CODE	ENGLISH DESCRIPTION	QTY (PCS)	Price (UNIT)
1	150-02-0101	CYLINDER BODY SET	1	¥6,600
2	150-02-0202	STUD BOLT, A	2	¥200
3	150-02-0301	STUD BOLT, B	2	¥200
4	150-02-0401	DOWEL PIN,	2	¥100
5	150-02-0501	CYLINDER GASKET	1	¥600

VALVE ACTUATING MECHANISM

LEG150 FI-03

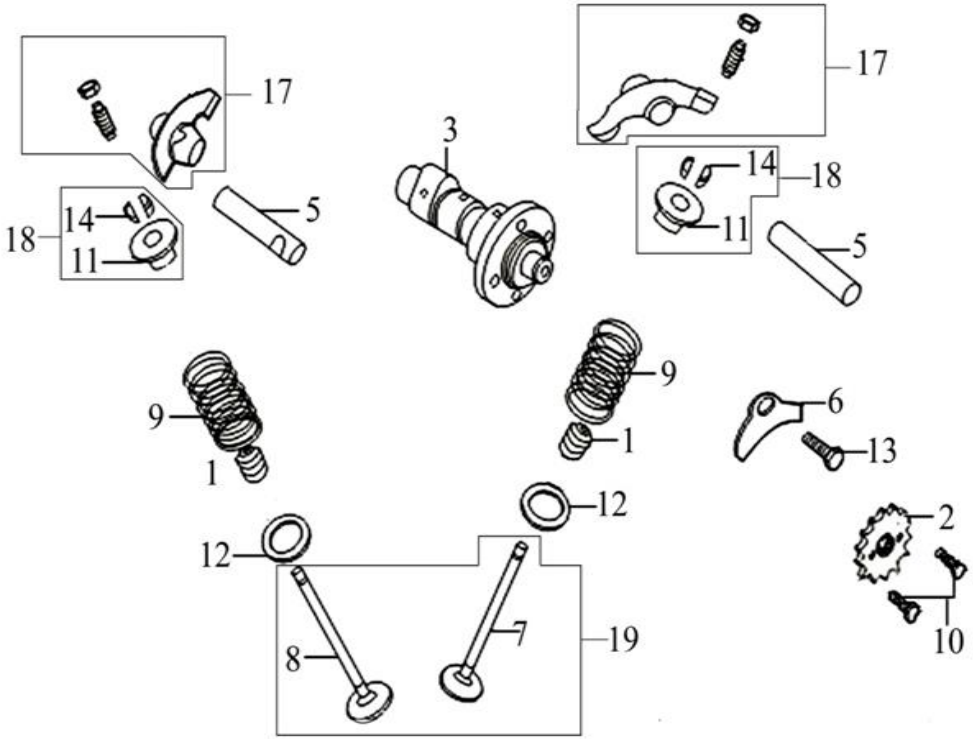

PICTURE	NO.	GPX CODE	ENGLISH DESCRIPTION	QTY (PCS)	Price (UNIT)
	1	150-03-0101	OIL SHIELD	2	¥300
	2	150-03-0201	TIMING DRIVEN SPROCKET	1	¥400
	3	150-03-0301	CAMSHAFT ASSY.	1	¥3,300
	5	150-03-0501	VALVE ROCKER ARM SHAFT	2	¥300
	6	150-03-0601	VALVE ROCKER ARM SHAFT CHECK PLATE	1	¥100
	7	150-03-0701	INLET VALVE	1	¥1,100
	8	150-03-0801	EXHAUST VALVE	1	¥1,100
	9	150-03-0901	VALVE SPRING,(OUTER)	2	¥300
	10	150-03-1001	HEXAGON BOLT,	2	¥100
	11	150-03-1101	VALVE SPRING RETAINER	2	¥200
	12	150-03-1201	VALVE SPRING OUTER SEAT,	2	¥100
	13	150-03-1301	CROSS RECESSED COUNTERSUNK HEAD SCREW	1	¥100
	14	150-03-1401	VALVE COTTER,	4	¥200
	17	150-03-1701	VALVE ROCKER ARM ASSY	2	¥900
	18	150-03-1801	CLIP & VALVE SPRING SEAT KIT	2	¥400
	19	150-03-1901	VALVE KIT	1	¥2,200

TIMING CHAIN,

LEG150 FI-04

PICTURE

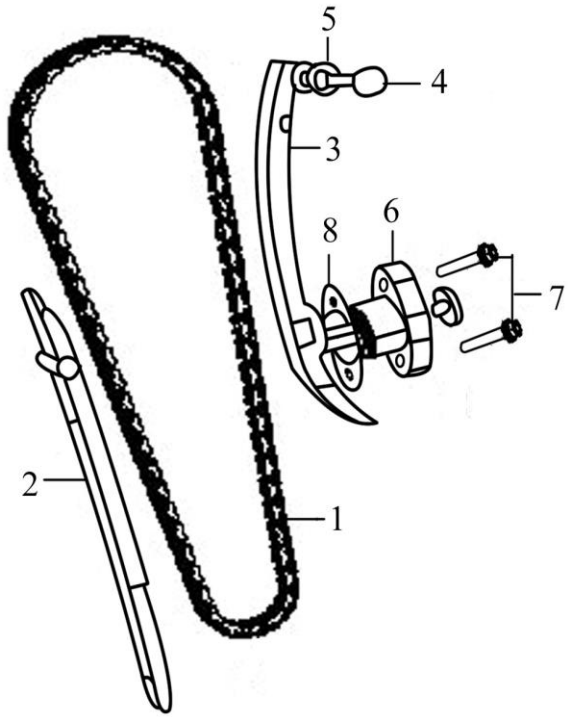

NO.	GPX CODE	ENGLISH DESCRIPTION	QTY (PCS)	Price (UNIT)
1	150-04-0101	TIMING CHAIN,	1	¥1,700
2	150-04-0201	CHAIN GUIDE PLATE	1	¥300
3	150-04-0301	CHAIN ADJUSTMENT PANEL	1	¥600
4	150-04-0401	CHAIN ADJUSTMENT PANEL CLEVIS PIN	1	¥200
5	150-04-0501	PLAIN WASHER	1	¥100
6	150-04-0601	CAM CHAIN TENSIONER ASSY	1	¥1,400
7	150-04-0701	HEXAGON FLANGE BOLT,	2	¥100
8	150-04-0801	CAM CHAIN TENSIONER GASKET	1	¥100

CRANKCASE ASSY. (1/2)

LEG150 FI-05

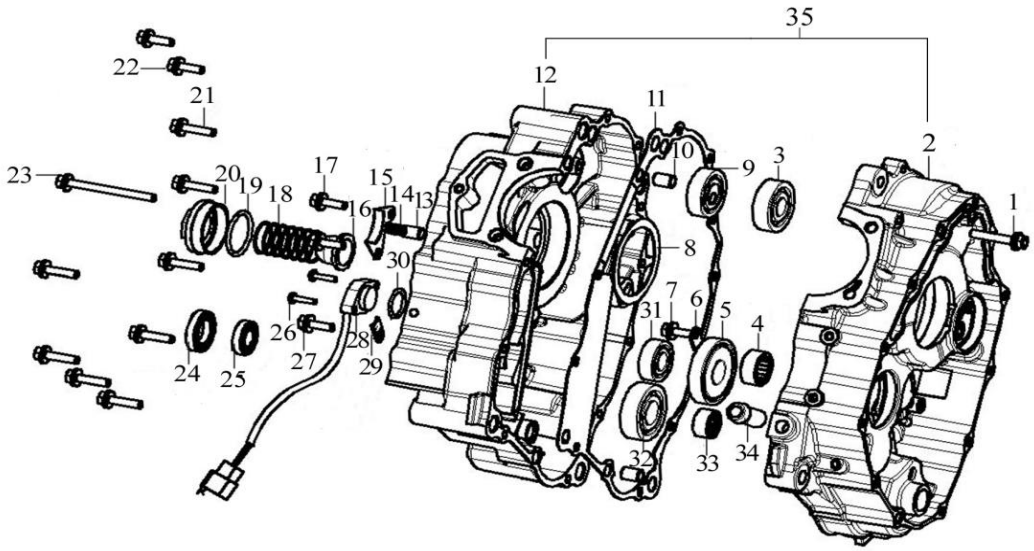

NO.	GPX CODE	ENGLISH DESCRIPTION	QTY (PCS)	Price (UNIT)
1	150-05-0101	HEXAGON FLANGE BOLT	1	¥200
2	150-05-0201	CRANKCASE BODY SET, RIGHT	1	¥9,800
3	150-05-0301	BEARING	1	¥1,400
4	150-05-0401	BEARING	1	¥200
5	150-05-0501	BEARING 6006 x 2120	1	¥1,100
6	150-05-0601	MAINSHAFT CHECK PLATE, BEARING	1	¥200
7	150-05-0701	HEXAGON FLANGE BOLT,	1	¥100
8	150-05-0801	OIL SEAL	1	¥300
9	150-05-0901	BEARING	1	¥1,600
10	250-05-1002	DOWEL PIN	2	-
11	150-05-1101	CRANKCASE GASKET	1	¥300
12	150-05-1201	CRANKCASE BODY SET, LEFT	1	¥15,000
13	150-05-1301	PRESSING PIN COMP.	1	¥100
14	150-05-1401	COMPRESSION SPRING	1	¥100
15	150-05-1501	TIMING CHAIN LIMIT PLATE	1	¥200
16	150-05-1601	OIL STRAINER SCREEN	1	¥200
17	250-05-1702	HEXAGON FLANGE BOLT	2	-
18	150-05-1801	COMPRESSION SPRING	1	¥100
19	150-05-1901	SEAL RING	1	¥200
20	150-05-2001	TAPPET ADJUSTING HOLE CAP	1	¥200
21	150-05-2108	HEXAGON FLANGE BOLT	8	¥200
22	250-05-2202	HEXAGON FLANGE BOLT	2	-
23	150-05-2301	HEXAGON FLANGE BOLT	1	¥200
24	150-05-2401-TH	OIL SEAL (20-34-7)	1	¥500
25	150-05-2501-TH	OIL SEAL (14-28-7)	1	¥400
26	250-05-2602	CROSS RECESSED PAN SCREW, HEAD/WASHER,ELASTIC/WASHER,PLAIN COMP.	2	-
27	150-05-2701	HEXAGON BOLT,	1	¥100
28	150-05-2801	GEAR INDICATOR SWITCH COMP	1	¥700
29	150-05-2901	TENSION DISC	1	¥100
30	150-05-3001	SEAL RING	1	¥100

CRANKCASE ASSY. (2/2)

LEG150 FI-05

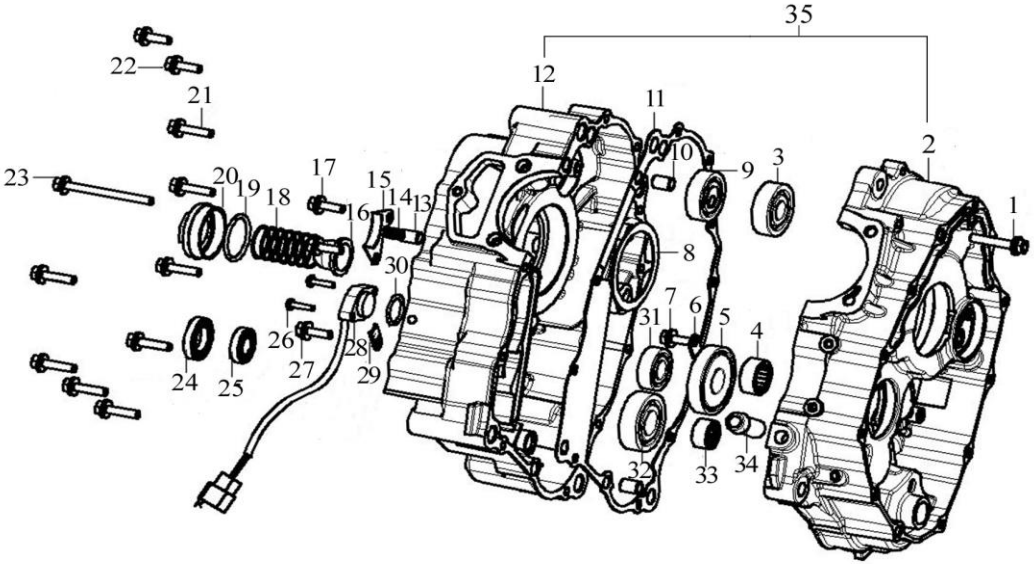

PICTURE	NO.	GPX CODE	ENGLISH DESCRIPTION	QTY (PCS)	Price (UNIT)
	31	150-05-3101	BEARING	1	¥600
	32	150-05-3201	BEARING	1	¥700
	33	150-05-3301	BEARING	1	¥300
	35	150-05-3501	CRANKCASE KIT	1	¥24,000

CRANKSHAFT COMP.

LEG150 FI-06

PICTURE

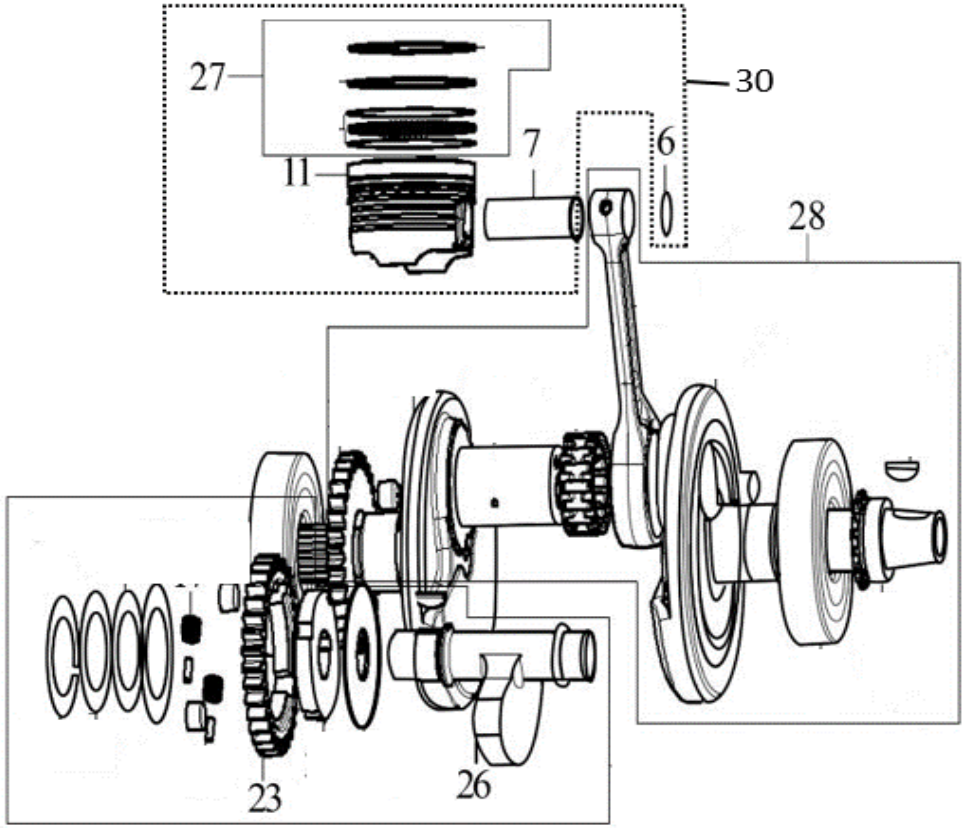

NO.	GPX CODE	ENGLISH DESCRIPTION	QTY (PCS)	Price (UNIT)
6	150-06-0601	STEEL CABLE BAFFLE CHECK RING	2	¥100
7	150-06-0701	PISTON PIN	1	¥200
11	150-06-1101	PISTON COMP.	1	¥2,000
23	150-06-2301	BALANCING ARBOR DRIVEN GEAR	1	¥5,400
27	150-06-2701	PISTON RING SET	1	¥3,500
28	150-06-2801	CRANKSHAFT COMP.	1	¥20,000
29	150-06-2901	BALANCING ARBOR COMP.	1	¥11,000
30	150-06-3001	PISTON & RING SET	1	¥5,500

ACTUATING MECHANISM ASSY.

LEG150 FI-07

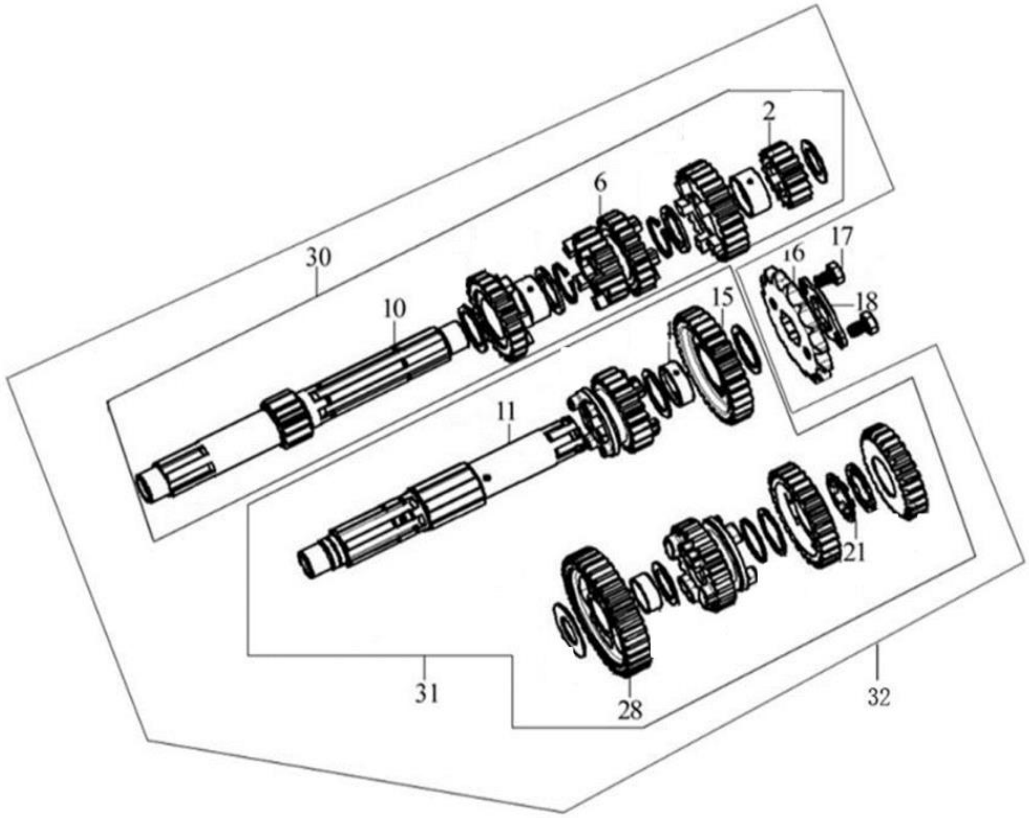

PICTURE	NO.	GPX CODE	ENGLISH DESCRIPTION	QTY (PCS)	Price (UNIT)
	2	150-07-0201	MAINSHAFT SECOND GEAR	1	¥1,500
	6	150-07-0601	MAINSHAFT THIRD GEAR	1	¥1,800
	10	150-07-1001	MAINSHAFT	1	¥2,700
	11	LEG200-07-11	COUNTERSHAFT	1	¥2,800
	15	150-07-1501	COUNTERSHAFT SECOND GEAR	1	¥1,800
	16	150-07-1601	COUNTERSHAFT DRIVING SPROCKET	1	¥800
	17	150-07-1701	HEXAGON BOLT	1	¥100
	18	150-07-1801	COUNTERSHAFT DRIVING SPROCKET FIXING PLATE	1	¥200
	21	150-07-2101	SPLINE WASHER	1	¥200
	28	150-07-2801	COUNTERSHAFT FIRST GEAR	1	¥2,000
	30	150-07-3001	MAINSHAFT COMP.	1	¥9,300
	31	150-07-3101	COUNTERSHAFT COMP.	1	¥14,000
	32	150-07-3201	MAINSHAFT & COUNTERSHAFT KIT	1	¥23,000

SPEED CONTROL MECHANISM ASSY.

LEG150 FI-08

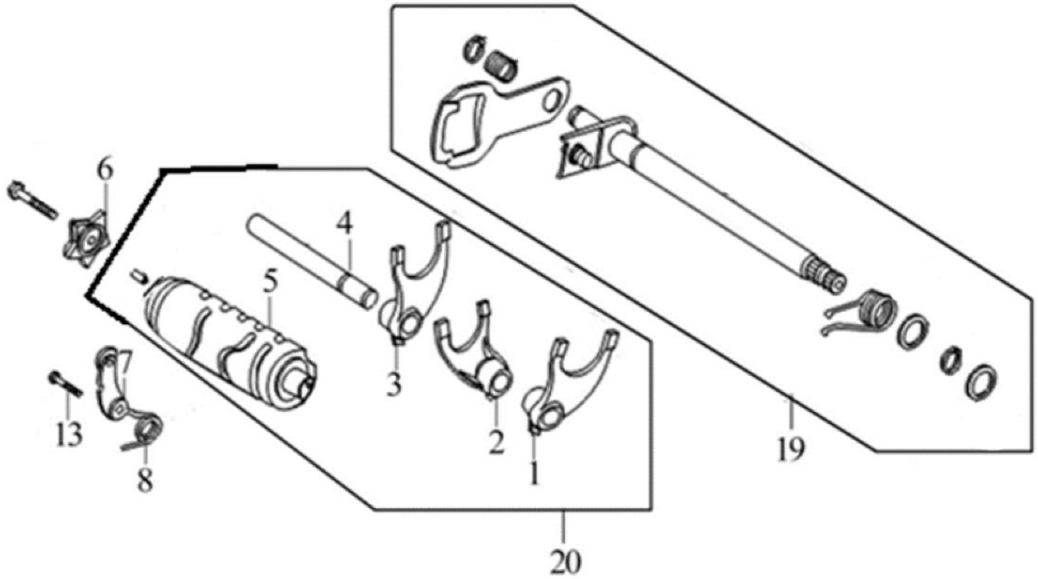

NO.	GPX CODE	ENGLISH DESCRIPTION	QTY (PCS)	Price (UNIT)
1	150-08-0101	GEAR SHIFT FORK	1	¥1,400
2	150-08-0201	GEAR SHIFT FORK	1	¥1,400
3	150-08-0301	GEAR SHIFT FORK	1	¥1,400
4	150-08-0401	SHIFT FORK GUIDE SHAFT	1	¥900
5	150-08-0501	GEAR SHIFT DRUM COMP	1	¥4,400
6	150-08-0601	DRUM STOPPER PLATE	1	¥700
7	150-08-0701	CHECK PLATE ASSY.	1	¥300
8	150-08-0801	TORSIONAL SPRING	1	¥200
13	150-08-1301	HEXAGON BOLT	1	¥100
15	150-08-1501	HEXAGON BOLT	1	¥100
19	150-08-1901	GEAR CHANGE ARM COMP	1	¥2,800
20	150-08-2001	GEAR SHIFT DRUM COMP	1	¥9,000

CLUTCH ASSY.

LEG150 FI-09

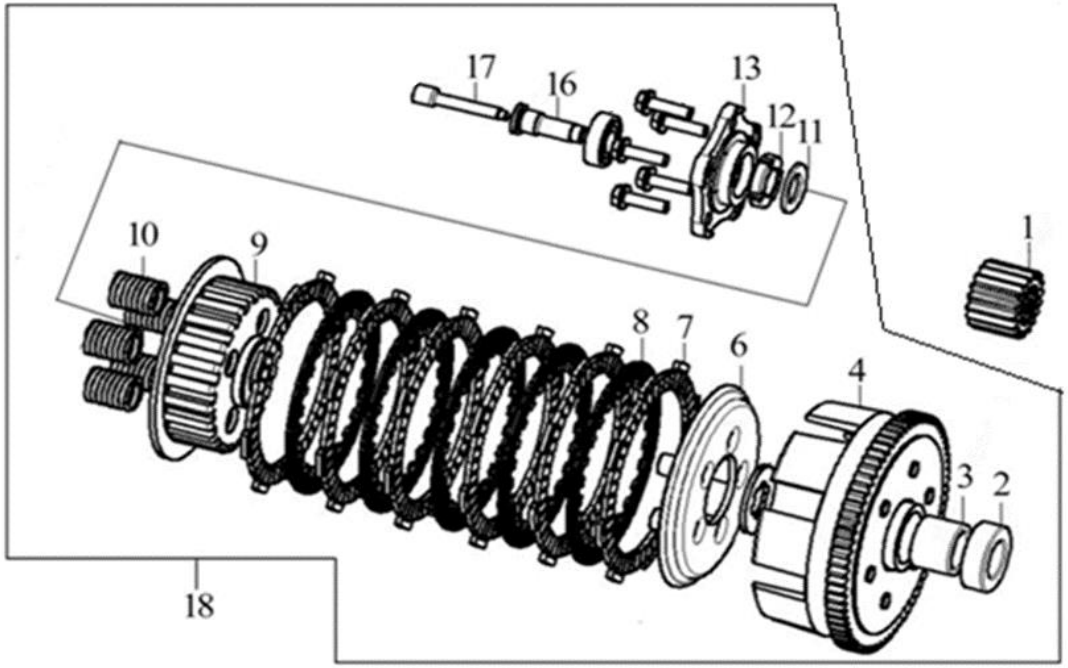

NO.	GPX CODE	ENGLISH DESCRIPTION	QTY (PCS)	Price (UNIT)
1	150-09-0101	PRIMARY DRIVING GEAR	1	¥1,500
6	150-09-0601	CLUTCH PRESSURE PLATE	1	¥700
7	150-09-0701	CLUTCH FRICTION DISK	6	¥700
8	150-09-0801	CLUTCH PLATE	5	¥400
9	150-09-0901	CLUTCH CENTER COMP	1	¥1,400
10	150-09-1001	CLUTCH SPRING	5	¥300
13	150-09-1301	CLUTCH LIFTER PLATE	1	¥700
16	150-09-1601	PUSH ROD	1	¥200
17	150-09-1701	EJECT-ROD	1	¥200
18	150-09-1801	CLUTCH KIT	1	¥11,000

LUBRICATING GEAR

LEG150 FI-10

PICTURE

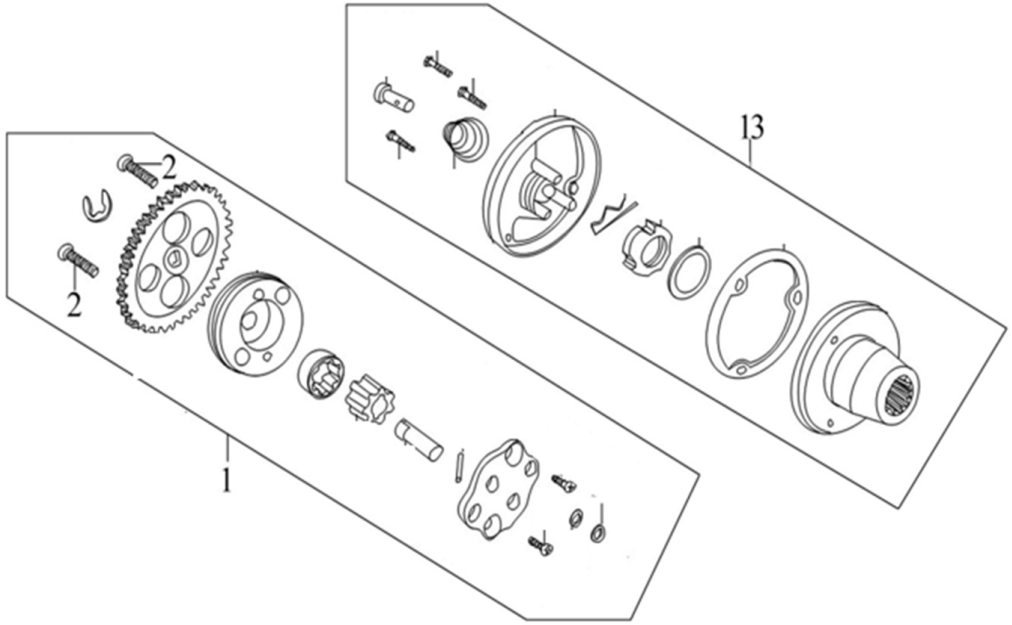

NO.	GPX CODE	ENGLISH DESCRIPTION	QTY (PCS)	Price (UNIT)
1	150-10-0101	OIL PUMP ASSY	1	¥3,100
2	150-10-0201	CROSS RECESSED COUNTERSUNK HEAD SCREW	2	¥100
13	150-10-1301	SECONDARY OIL FILTER ASSY	1	¥2,000

CRANKCASE COVER COMP.,RIGHT

LEG150 FI-11

PICTURE	NO.	GPX CODE	ENGLISH DESCRIPTION	QTY (PCS)	Price (UNIT)
	1	150-11-0101	HEXAGON FLANGE BOLT	12	¥100
	2	150-11-0201	CLUTCH CABLE LOCATING PLATE	1	¥200
	3	150-11-0301	SEAL RING	1	¥100
	4	150-11-0401	OIL LEVEL GAUGE COMP	1	¥300
	5	150-11-0501	CLUTCH JOYSTICK ASSY	1	¥700
	6	250-11-0602	SEAL RING	2	-
	7	150-11-0701	TORSIONAL SPRING	1	¥100
	8	150-11-0801	BACKING PIN	1	¥100
	9	150-11-0901	CRANKCASE COVER COMP., RIGHT	1	¥8,800
	10	150-11-1001	CRANKCASE COVER GASKET, RIGHT	1	¥500
	11	250-11-1102	DOWEL PIN,	2	-

GENERATOR ASSY.

LEG150 FI-12

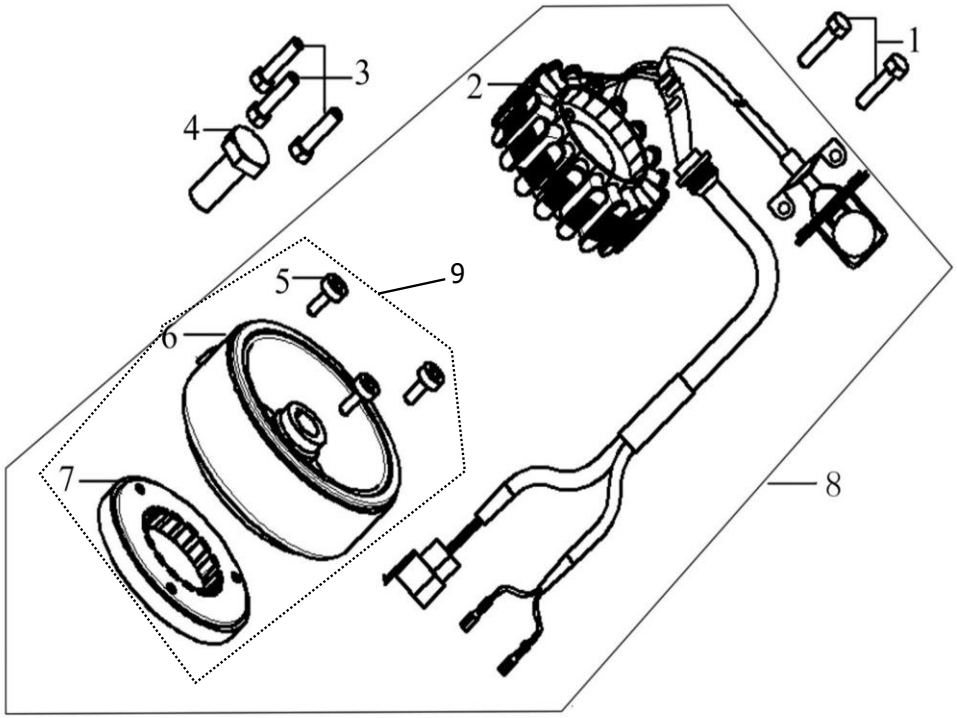

NO.	GPX CODE	ENGLISH DESCRIPTION	QTY (PCS)	Price (UNIT)
1	150-12-0101	HEXAGON FLANGE BOLT	2	¥100
2	150-12-0201	STATOR COMP.	1	¥7,200
3	150-12-0301	HEXAGON FLANGE BOLT	3	¥100
4	150-12-0401	HEXAGON FLANGE BOLT	1	¥100
5	150-12-0501	HEXAGON SOCKET SCREW	3	¥100
6	150-12-0601	ROTOR COMP.	1	¥9,700
7	150-12-0701	STARTING CLUTCH BODY ASSY	1	¥3,100
8	150-12-0801	GENERATOR ASSY.	1	¥16,000
9	150-12-0901	ROTOR COMP.	1	¥8,500

CRANKCASE COVER COMP.,LEFT

LEG150 FI-13

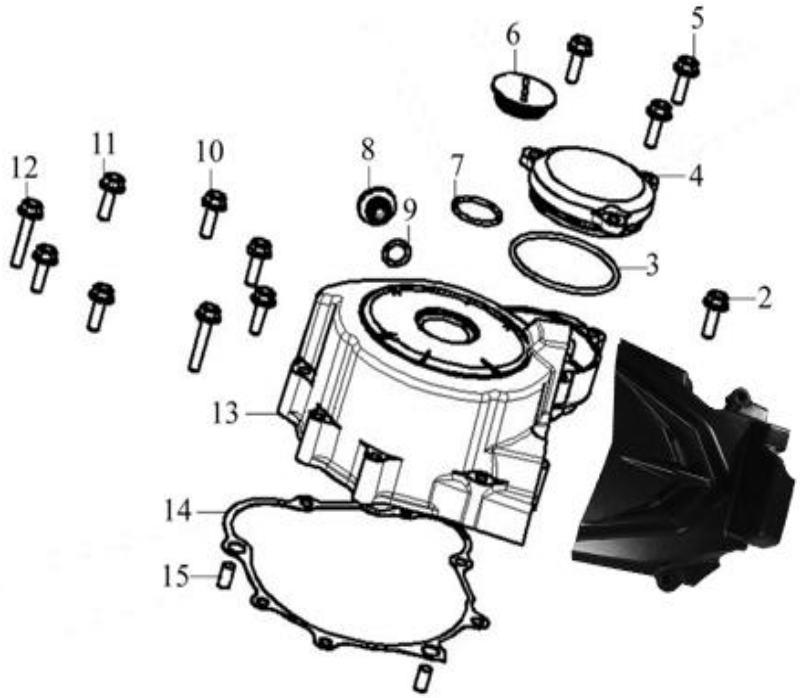

PICTURE	NO.	GPX CODE	ENGLISH DESCRIPTION	QTY (PCS)	Price (UNIT)
	1	150-13-0101	REAR COVER COMP., LEFT	1	¥3,300
	2	150-13-0201	HEXAGON FLANGE BOLT	2	¥100
	3	150-13-0301	SEAL RING	1	¥200
	4	150-13-0401	GEAR CHAMBER COVER	1	¥1,100
	5	150-13-0503	HEXAGON FLANGE BOLT	3	¥100
	6	150-13-0601	DECORATING COVER, LEFT	1	¥200
	7	150-13-0701	SEAL RING	1	¥100
	8	150-13-0801	INSPECTION COVER	1	¥200
	9	150-13-0901	SEAL RING	1	¥100
	10	150-13-1001	HEXAGON FLANGE BOLT	1	¥100
	11	150-13-1101	HEXAGON FLANGE BOLT	5	¥200
	12	150-13-1201	HEXAGON FLANGE BOLT	2	¥200
	13	150-13-1301	FRONT COVER COMP., LEFT	1	¥4,900
	14	150-13-1401	FRONT COVER GASKET, LEFT	1	¥400
	15	150-13-1501	DOWEL PIN,	2	¥100

ELECTRIC STARTER ASSY

LEG150 FI-14

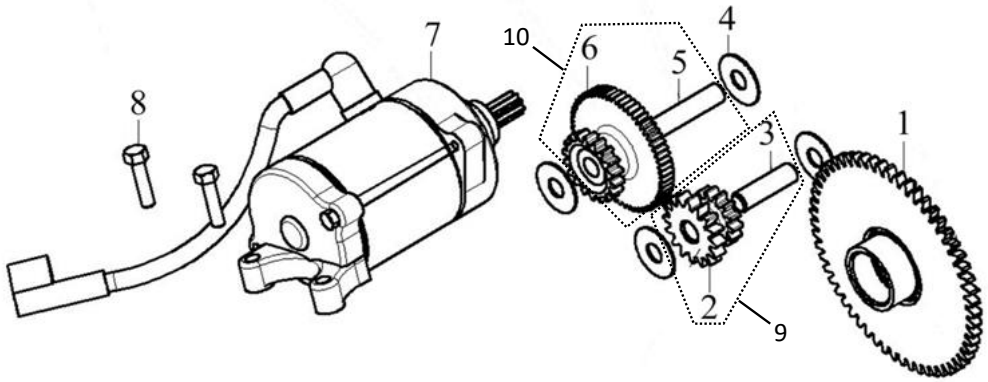

PICTURE	NO.	GPX CODE	ENGLISH DESCRIPTION	QTY (PCS)	Price (UNIT)
	1	150-14-0101	DISK GEAR	1	¥1,700
	2	150-14-0201	ELECTRIC STARTING GEAR IDLE	1	¥900
	3	150-14-0301	DUPLEX GEAR SHAFT ASSY.,	1	¥200
	4	150-14-0404	SHOULDER CHECK RING	4	¥100
	5	150-14-0501	DUPLEX GEAR SHAFT ASSY.,	1	¥200
	6	150-14-0601	ELECTRIC STARTING DUPLEX GEAR	1	¥1,300
	7	150-14-0701	STARTING MOTOR ASSY	1	¥7,100
	8	250-14-0802	HEXAGON FLANGE BOLT	2	-
	9	150-14-0901	ELECTRIC STARTING W/H SHAFT GEAR IDLE	1	¥1,100
	10	150-14-1001	ELECTRIC STARTING W/H SHAFT DUPLEX GEAR	1	¥1,400

LIGHT & METER

LG150 FI - 15

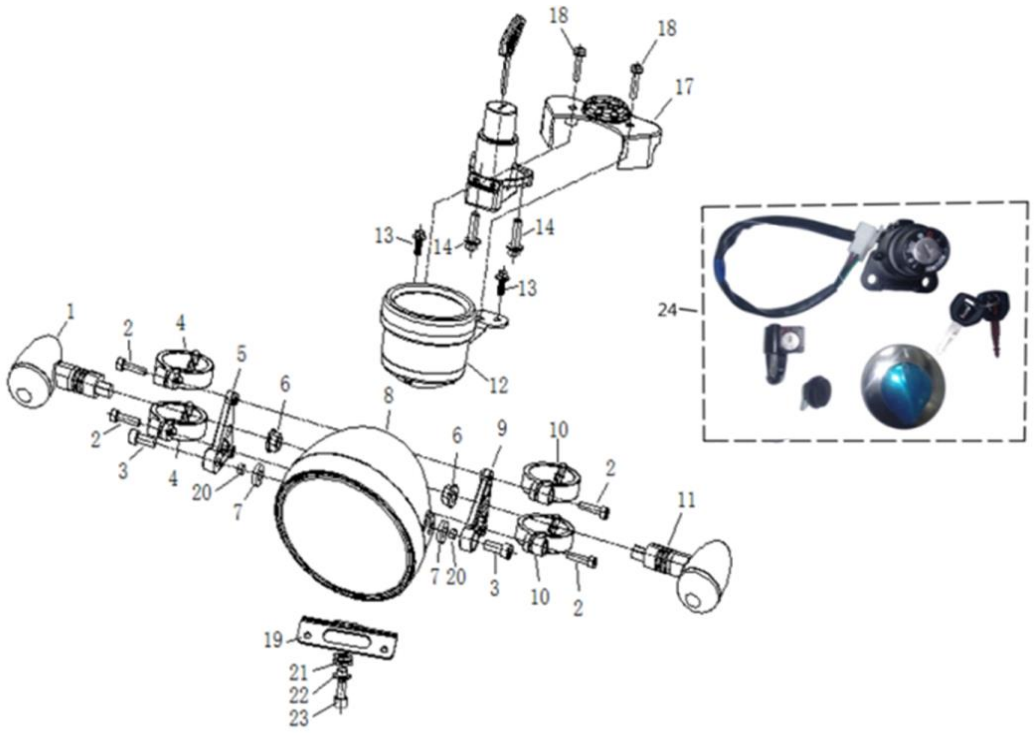

NO	GPX CODE	ENGLISH DESCRIPTION	QTY (PCS)	Price (UNIT)
1	250-19-0101	Fr. Turning light RH.	1	¥1,400
2	250-19-0201	Hexagon socket head cap screws,M6×25	4	¥100
3	250-19-0301	Hexagon socket head cap screws,M8×16	2	¥100
4	250-19-0401	Headlamp RH seat bracket	2	¥700
5	250-19-0501	Headlamp RH bracket	1	¥900
6	LEG-17-14	Hexagon flange Nut M12, GB6177-2000	2	¥100
7	250-19-0701	Rubber washer	2	¥100
8	250-19-0801	Headlight	1	¥28,000
9	250-19-0901	Headlamp LH bracket	1	¥900
10	250-19-1001	Headlamp LH seat bracket	2	¥700
11	250-19-1101	Fr. Turning light RH.	1	¥1,400
12	250-19-1201	Meter assy	1	¥19,000
13	250-19-1301	Hexagonal flange bolt M6×16	2	¥100
14	250-19-1401	Hexagon socket head cap screws,M8×25,GB/T 70.1-2000	2	¥100
17	LEG-15-04	Meter decoration cover	1	¥1,000
18	LEG-15-08	Cross large flat head screw,Stainless steel screw,M6×25	2	¥100
19	250-19-1901	Headlamp LH seat bracket	1	¥600
20	250-19-2001	Bush Φ8×Φ10×10	2	¥100
21	250-19-2101	H rubber	1	¥100
22	250-19-2201	BUSH Φ6.5×10/Φ18×2+Φ8.5×8	1	¥300
23	250-19-2301	Hexagonal flange bolt,M6×12	1	¥100
24	250-39-1501	All set lock	1	¥6,800

HANDLE BAR & REAR MIRROR (1/2)

LG150 FI - 16

PICTURE

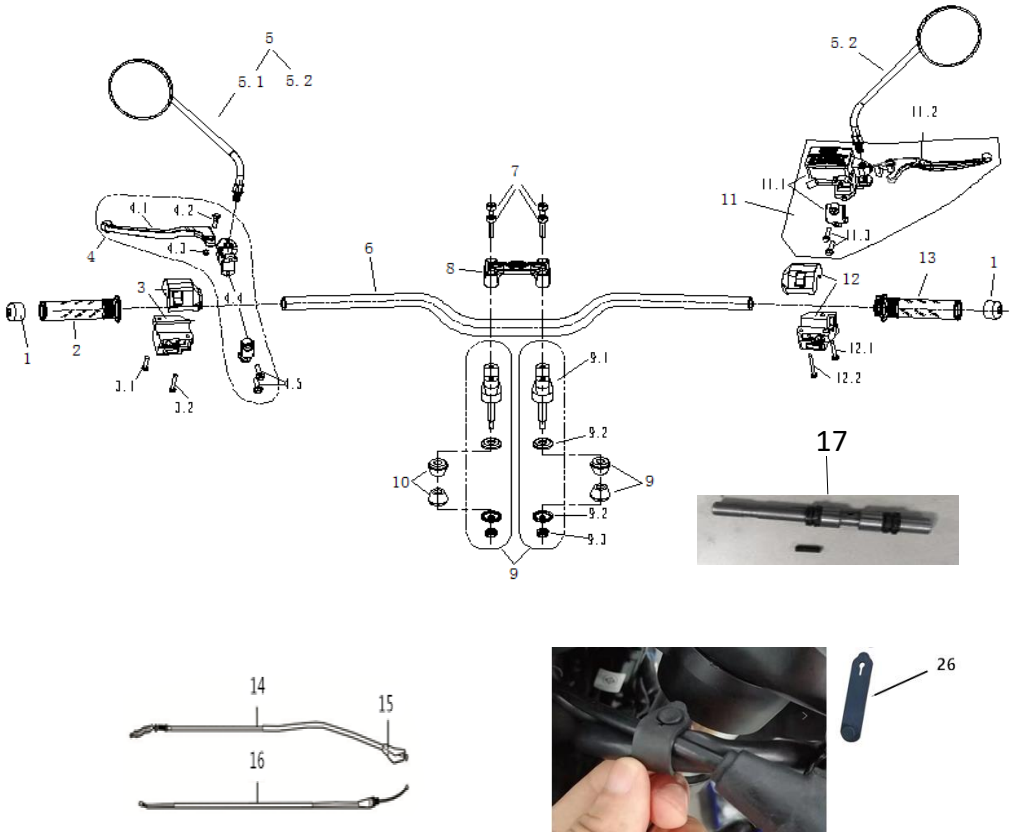

NO	GPX CODE	ENGLISH DESCRIPTION	QTY (PCS)	Price (UNIT)
1	150-16-0101	Handlebar Balance Hammer	2	¥900
2	250-20-0202	Handle grip LH.	1	¥1,100
3	250-20-0302	Switch assy LH.	1	¥2,700
3.1	250-20-1001	Pan head screws with cross recess, M5×25	1	¥100
3.2	250-20-1101	Pan head screws with cross recess, M5×35	1	¥100
4	LEG-16-13	CLUTCH LEVER LH.	1	¥1,600
4.1	250-20-4.102	CLUTCH LEVER only LH.	1	¥1,400
4.2	250-20-0601	Pin shaft	1	¥300
4.3	250-20-0701	All-metal hexagonal locking nut, M6	1	¥100
4.4	250-20-0801	Clutch lever holder	1	¥900
4.5	250-20-1201	Hexagonal flange bolt,M6×25,GB/T 16674.1-2004	2	¥100
5.1	250-20-05.102	LH Side mirror	1	¥3,000
5.2	250-20-05.202	RH Side mirror	1	¥3,000
6	150-16-0601	Handle bar	1	¥8,000
7	250-20-0702	Hexagon socket head cap screws,M8×35,GB/T 70.1-2000	4	¥100
8	250-20-0802	Handle Riser upper	1	¥2,400
9	250-20-0902	Handle Riser holder sets	2	¥2,600
9.1	250-20-9.102	Handle Riser holder	2	¥2,200
9.2	250-20-9.202	Washer φ12	2	¥300
9.3	250-20-9.302	Washer φ8	2	¥300
9.4	250-20-9.402	All-metal hexagonal flange locking nut M8×1.25	2	¥100
10	250-20-1002	Handle Riser holder of rubber	4	¥200
11	LEG200-20-01-01	Front brake pump with brake lever	1	¥9,000
11.1	LEG200-20-01-01-02	Front brake pump	1	¥7,600
11.2	LEG200-20-01-01-01	Front brake lever	1	¥1,500
11.3	250-20-1201	Hexagonal flange bolt,M6×25,GB/T 16674.1-2004	2	¥100
12	250-20-1202	Switch assy RH.	1	¥3,000
12.1	250-20-1101	Pan head screws with cross recess, M5×35	1	¥100
12.2	250-20-1801	Pan head screws with cross recess, M5×45	1	¥100

HANDLE BAR & REAR MIRROR (2/2)

LG150 FI - 16

PICTURE

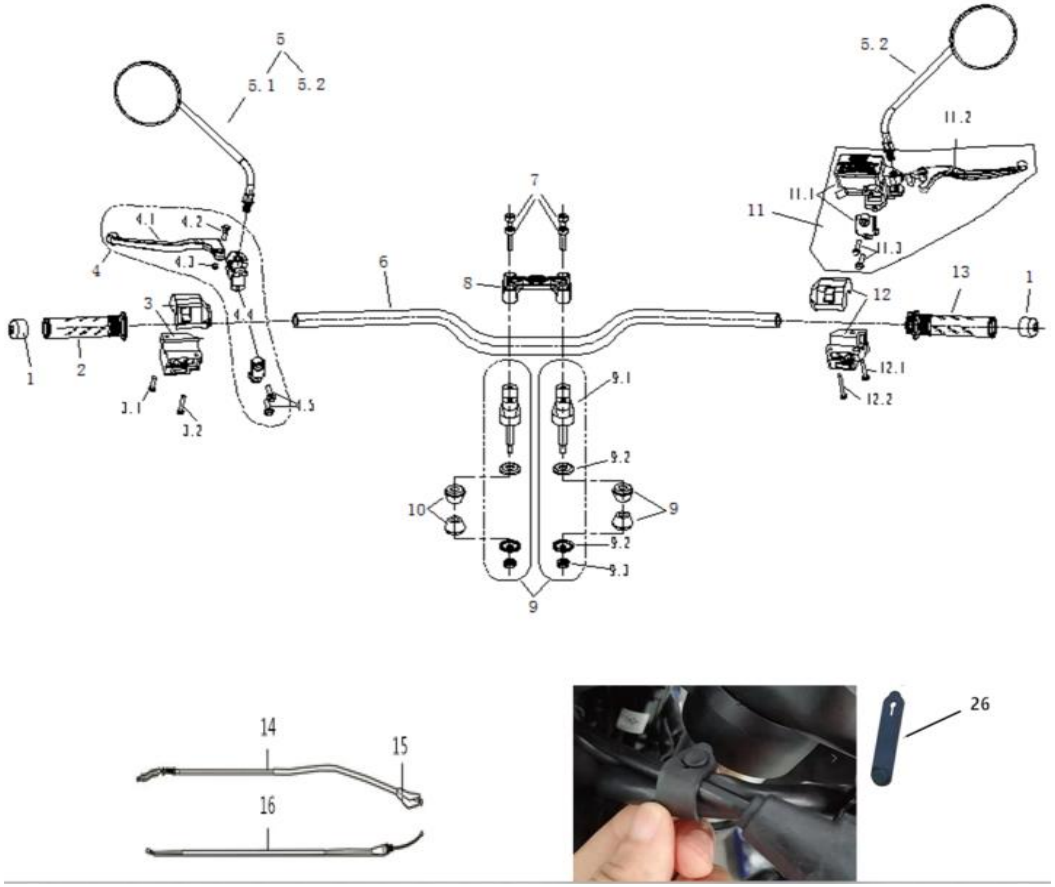

NO	GPX CODE	ENGLISH DESCRIPTION	QTY (PCS)	Price (UNIT)
13	250-20-1302	Handle grip RH.	1	¥1,200
14	150-16-1401	Clutch cable	1	¥1,000
15	LEG-16-15	Clutch cable rubber	1	¥200
16	150-16-1601	Thottle cable	1	¥700
26	250-20-2601	BandL 14×L62mm	2	¥200

STEERING STEEM

LG150 FI - 17

PICTURE

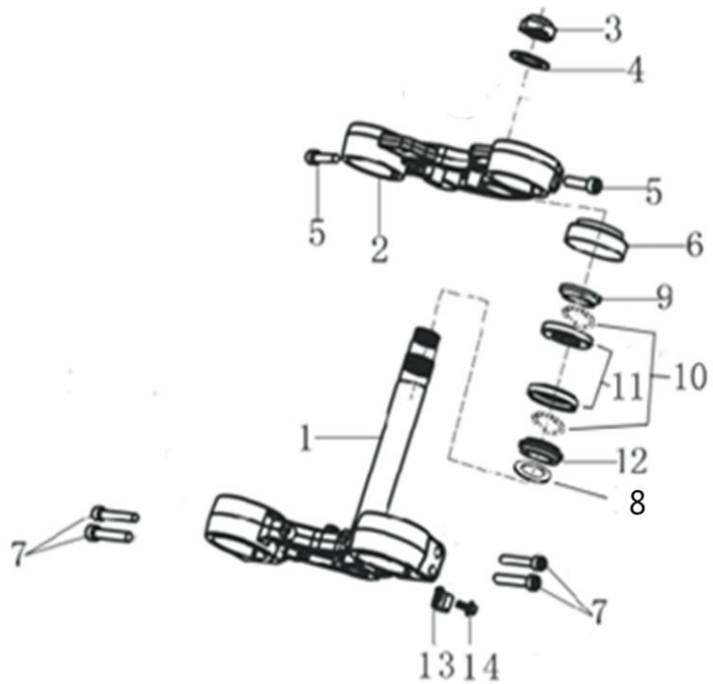

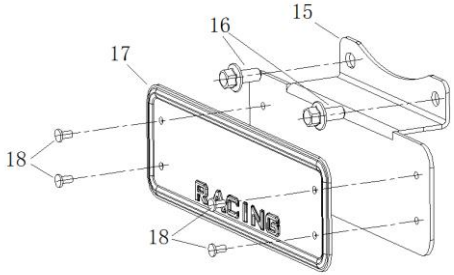

NO	GPX CODE	ENGLISH DESCRIPTION	QTY (PCS)	Price (UNIT)
1	LEG200-17-01	Steering stem board, upper	1	¥13,000
2	LEG200-17-02	Steering stem board, lower	1	¥7,600
3	LEG-17-03	Nut GB/T923-2009 M24×1	1	¥200
4	LEG-17-04	Steering stem board washer Φ24	1	¥200
5	250-21-0501	Hexagon socket head cap screws,M8×30	2	¥100
6	LEG-17-06	Steering stem board locked nut M26×1	1	¥300
7	250-21-0701	Steering stem board washer Φ24	4	¥100
8	250-21-0801-TH	rubber seal φ40×φ31×1 2	1	¥200
9	LEG-17-09	upper returning Bearing	1	¥800
10	LEG-17-10	upper returning Pedestal bearing	2	¥300
11	LEG-17-11	upper turning Reel bearing	2	¥300
12	LEG-17-12	upper returning Steel ball bearing	1	¥800
13	250-21-1301	Speed sensor clip φ6.5	1	¥300
14	250-19-2301	Hexagonal flange bolt,M6×12	1	¥100
15	250-21-1501	Bracket for fr. Logo	1	¥1,300
16	250-19-2301	Hexagonal flange bolt,M6×12	2	¥100
17	250-21-1701	Fr. Logo	1	¥1,600
18	250-21-1801	Rivet 3.2×7	4	¥100

FRONT SHOCK

LG150 FI - 18

PICTURE

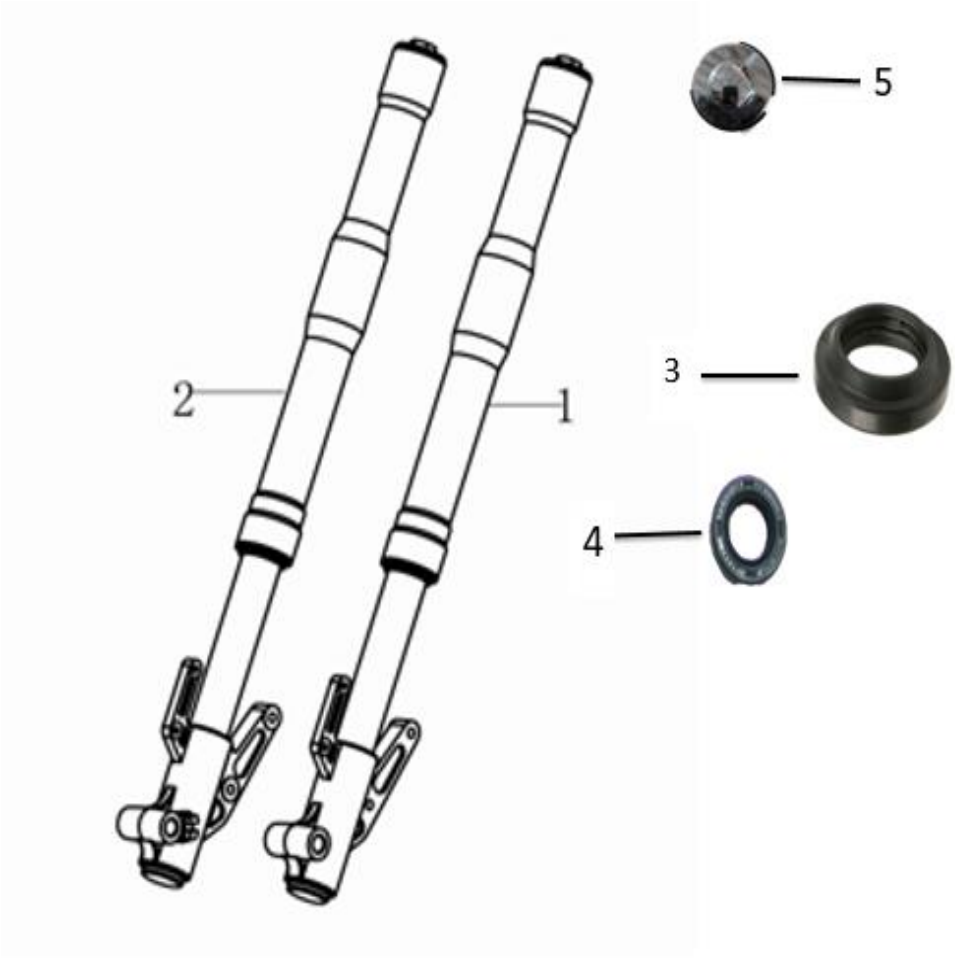

NO	GPX CODE	ENGLISH DESCRIPTION	QTY (PCS)	Price (UNIT)
1	150-18-0101	Front shock L.	1	¥30,000
2	150-18-0201	Front shock R.	1	¥30,000
3	LEG200-18-03-TH	Dust SEAL, front shoock 38x50x10	1	¥2,200
4	LEG200-18-04-TH	Oil SEAL, front shoock 37-50.3/14.7	1	¥1,600
5	LEG200-18-05	Shock absorber	1	¥1,300

FRONT FENDER

LG150 FI - 19

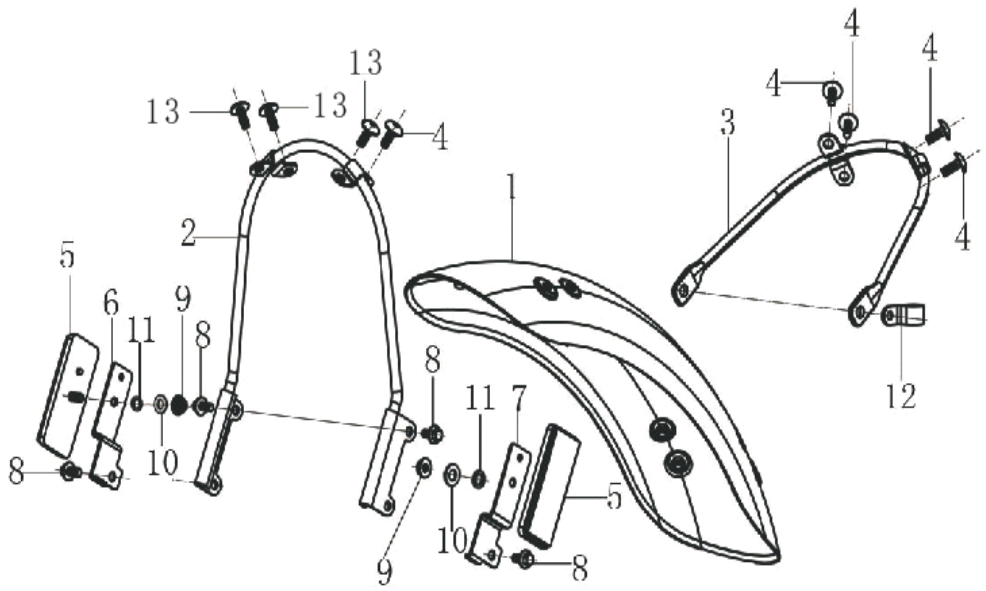

PICTURE	NO	GPX CODE	ENGLISH DESCRIPTION	QTY (PCS)	Price (UNIT)
	1	250-23-0101-BLK	Fr.fender-BLK	1	¥8,000
		250-23-0102-BLK1	Fr.fender-Matt-BLK	1	¥8,000
	1	250-23-0102-SIL1	Fr.fender-SIL	1	¥8,000
	2	250-23-0201	Fr. Fender bracket A	1	¥1,200
	3	250-23-0301	Fr. Fender bracket B	1	¥900
	4	LEG-19-04	Cross large flat head screw Bolt M6×10	5	¥100
	5	LEG-19-05	Side reflector LH.&RH.	1	¥500
	9	LEG-19-06	Hexagonal flange nut M6	1	¥300
	10	LEG-19-07	Spring washer φ6	1	¥300
	11	250-19-1301	Hexagonal flange bolt M6×16	1	¥100
	6	LEG-19-09	Hexagonal flange nut M6	1	¥100
	7	LEG-19-10	Spring washer φ6	1	¥100
	8	LEG-19-08	Bolt M6×16	4	¥100
	12	LEG-19-12	Speed sensor clip φ8.5	1	¥100
	13	250-23-1301	Cross large flat head screw Bolt M6×12	3	¥100

FRONT BREAK PUMP

LG150 FI - 20

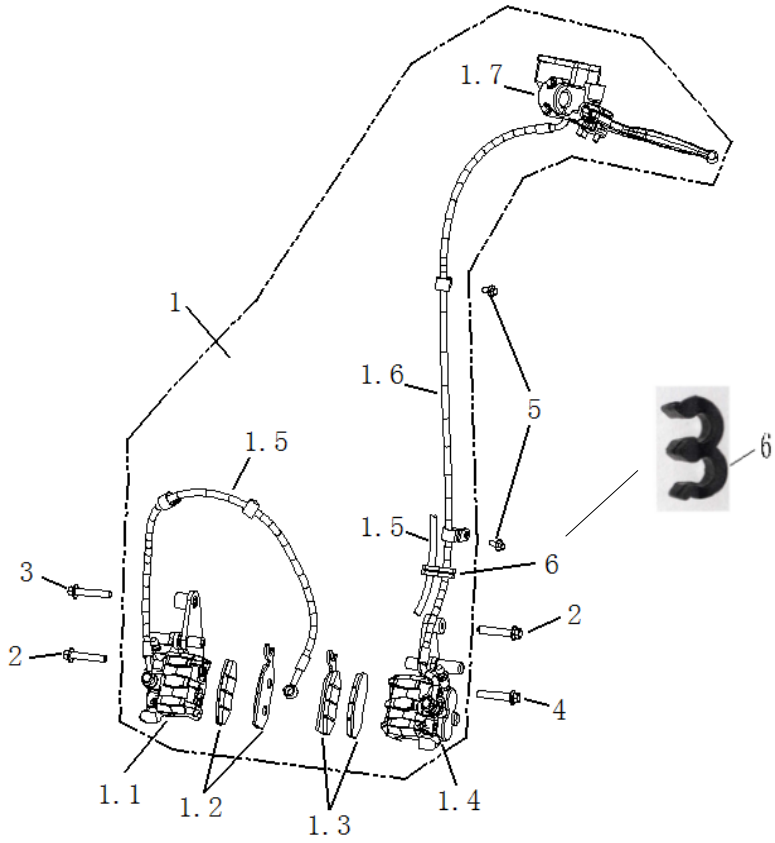

NO	GPX CODE	ENGLISH DESCRIPTION	QTY (PCS)	Price (UNIT)
1	150-20-0101	Front Brake assy	1	¥27,000
1.1	LEG200-20-01-02	Front Break house LH lower	1	¥9,500
1.2	LEG200-20-06-TH	LH break shoe	1	¥1,100
1.3	LEG-20-07-TH	RH break shoe	1	¥1,100
1.4	LEG-20-01-03	Front Break house RH lower	1	¥9,500
1.5	LEG200-20-01-05	Oil break bump pipe, connector	1	¥1,900
1.6	250-24-01.602	Front break bump pipe	1	¥4,300
2	LEG-20-02	Hexagonal flange bolt M8×45	2	¥200
3	LEG-20-03	Hexagonal flange bolt M8×50	1	¥200
4	LEG-20-04	Hexagonal flange bolt M8×40	1	¥200
5	250-19-2301	Hexagonal flange bolt,M6×12	1	¥100
6	250-24-0601	Break bump clip	1	¥200

FRONT WHEEL ASSY

LG150 FI - 21

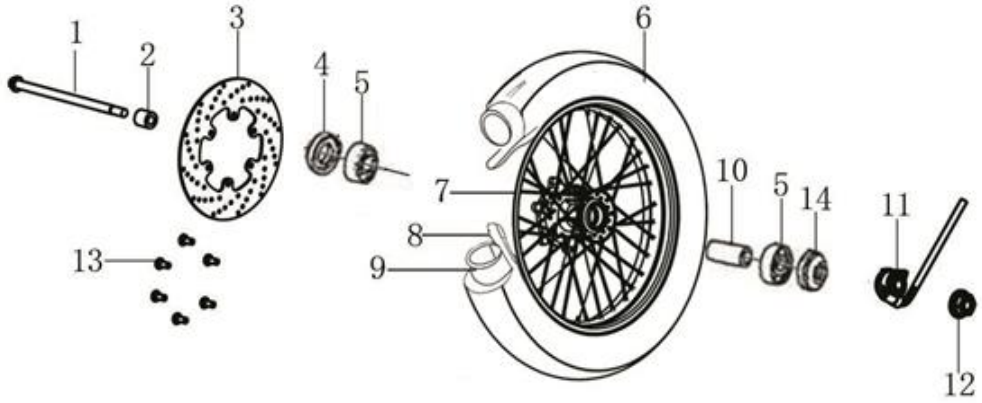

NO	GPX CODE	ENGLISH DESCRIPTION	QTY (PCS)	Price (UNIT)
1	LEG-21-01	Axle, front	1	¥1,000
2	LEG-21-02	Front wheel Bush, RH	1	¥600
3	LEG-21-03	Front brake Disk	1	¥5,400
4	LEG-21-04	seal	1	¥600
5	LEG-21-05	Bearing 6302	2	¥800
6	LEG150S-21-20-TH	FRONT WHEEL OUTER TIRE 110/90-17	1	¥23,000
7	LEG150S-21-07	Front wheel assy, 2.15-17	1	¥27,000
8	LEG-TRF-TH	Wheel rim rubber	1	¥400
9	LEG150S-21-21-TH	FRONT INNER TIRE 110/90-17	1	¥2,200
10	LEG-21-10	Bush	1	¥300
11	LEG-21-11	Speed counter	1	¥3,400
12	LEG-30-01	All-metal hexagonal flange locking Nut M14×1.5	1	¥300
13	LEG-21-13	Bolt	6	¥200
14	150-21-1401	seal	1	-
15	LEG150S-21-17	Spoke & Nipple Set, Front	1	¥3,800
16	LEG150S-21-18	Spoke & Nipple Set,IN, Front	1	¥200
17	LEG150S-21-19	Spoke & Nipple Set,OUT, Front	1	¥200
18	LEG-21-16-TH	Fr. Wheel Rim	1	¥11,000
19	LEG150-21-15	Fr. Wheel Hub Assy.	1	¥13,000

FUEL TANK

LG150 FI - 22

PICTURE

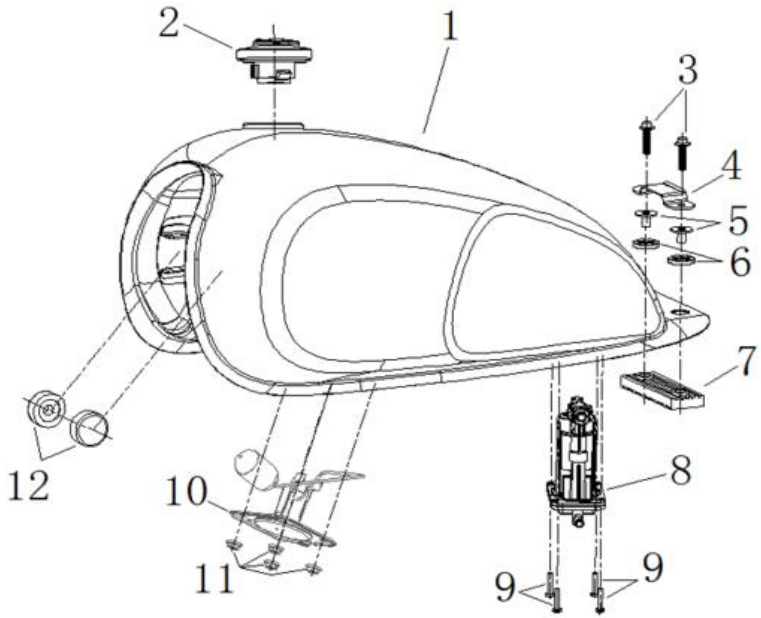

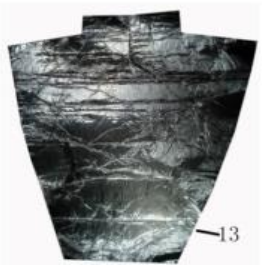

14

NO	GPX CODE	ENGLISH DESCRIPTION	QTY (PCS)	Price (UNIT)
1	150-22-0101-BLK	TANK -Black（with sticker)	1	¥36,000
1	150-22-0101-MBLK	TANK -Matt-Black（with sticker)	1	¥36,000
1	150-22-0101-SIL	TANK -Silver（with sticker)	1	¥36,000
3	150-22-0301	Hexagonal flange bolt,M6×35	2	¥100
4	LEG-22-04	Bracket A for seat	1	¥400
5	250-26-0501	Bush for tank	2	¥200
6	250-26-1301	Rubber for tank Fr. Postion	2	¥100
7	250-26-0601	Rubber for tank	1	¥600
8	150-22-0801	Electric fuel injection pump	1	¥19,000
9	150-22-0901	Pan head screws with cross recess, M4×18	4	¥100
10	LEG-22-08	Fuel sensor	1	¥1,200
11	LEG-29-14	Hexagonal flange nut M6	4	¥100
12	LEG-22-12	Rubber	2	¥200
13	250-26-1201	Oil Tank Heat Insulation Plate	1	¥1,500
14	150-38-0101-TH	STICKER LEGEND LOGO	2	¥2,600

LEFT AND RIGHT COVER

LG150 FI - 23

PICTURE

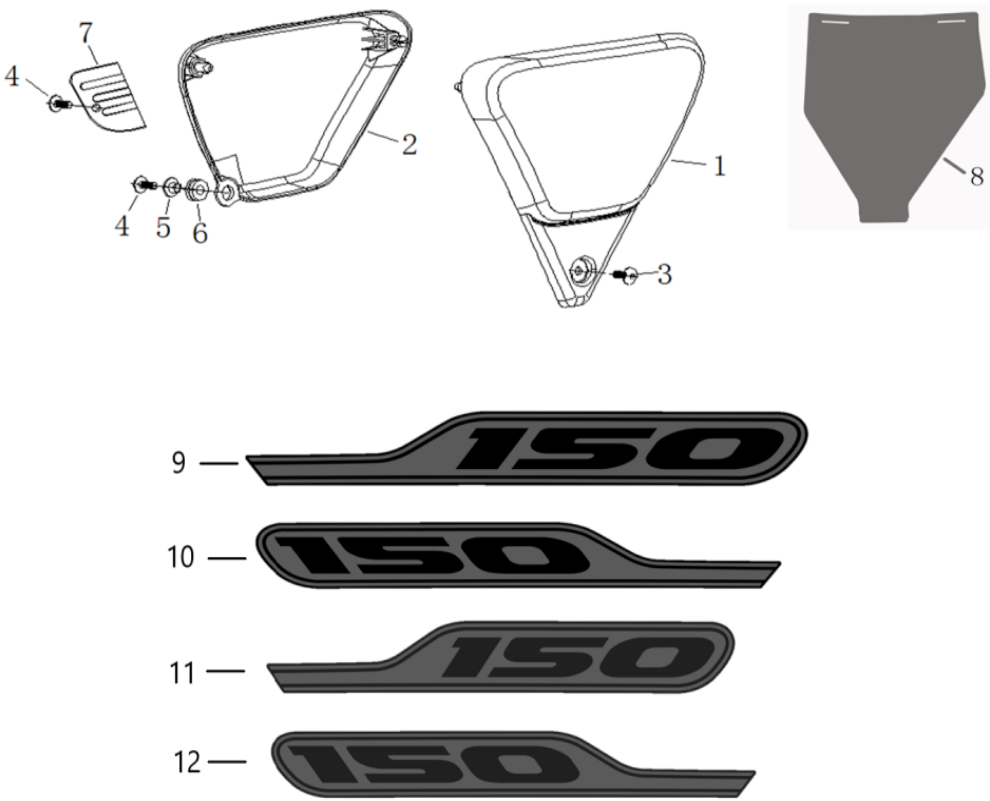

NO	GPX CODE	ENGLISH DESCRIPTION	QTY (PCS)	Price (UNIT)
1	150-23-0101-BLK	Side cover LH.- Black with sticker	1	¥5,000
1	150-23-0101-MBLK	Side cover LH.- Matt Black with sticker	1	¥5,000
1	150-23-0101-SIL	Side cover LH.- Silver with sticker	1	¥5,000
2	150-23-0201-BLK	Side cover RH.- Black with sticker	1	¥5,000
2	150-23-0201-MBLK	Side cover RH.- Silver with sticker	1	¥5,000
2	150-23-0201-SIL	Side cover RH.- Silver with sticker	1	¥5,000
3	LEG-23-03	Bolt M6×16	1	¥100
4	LEG-23-04	Bolt M6×20	1	¥100
5	LEG-23-05	Bush	1	¥200
6	LEG-23-06	H aprons	1	¥200
7	150-23-0701	Decorative plate,right side cover	1	¥700
8	250-27-1401	Rubber for Side cover LH.	4	¥700
9	150-38-0201-BLK-TH	SIDE COVER STICKER (RH-BLACK)	1	¥500
10	150-38-0301-BLK-TH	SIDE COVER STICKER (LH-BLACK)	1	¥500
11	150-38-0401-SIL-TH	SIDE COVER STICKER (RH-SILVER)	1	¥500
12	150-38-0501-SIL-TH	SIDE COVER STICKER (LH-SILVER)	1	¥500

SIDE SUPPORT

LG150 FI - 24

PICTURE

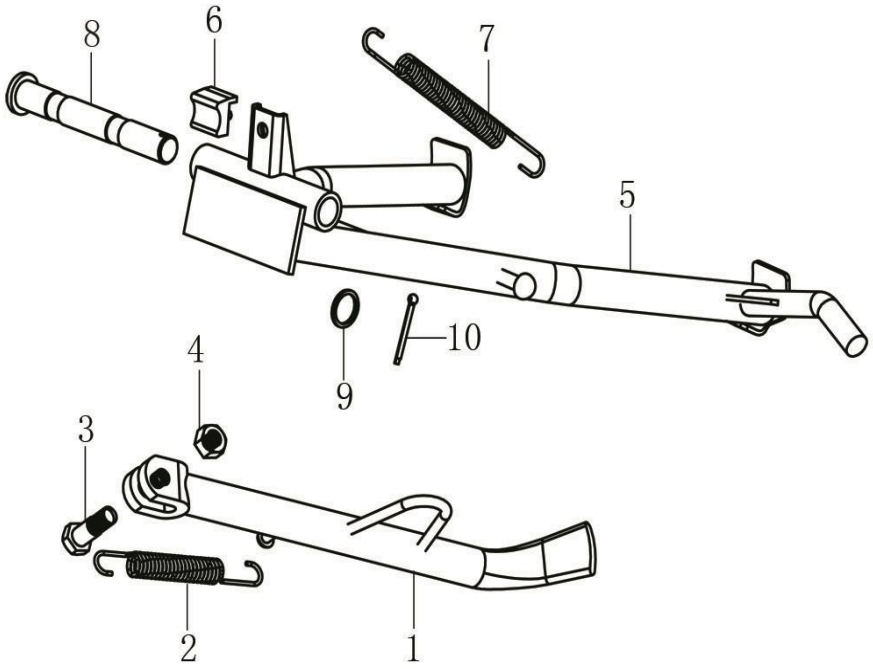

NO	GPX CODE	ENGLISH DESCRIPTION	QTY (PCS)	Price (UNIT)
1	LEG-24-01	Side stand assy	1	¥1,500
2	LEG-24-02	Spring for side stand	1	¥300
3	LEG-24-03	Axle for side stand	1	¥200
4	LEG-24-04	Nut M10×1.25	1	¥100
5	LEG-24-05	Main stand	1	¥2,700
6	LEG-24-06	Rubber for main stand	1	¥200
7	LEG-24-07	Spring for main stand	1	¥200
8	LEG-24-08	Axle for main stand	1	¥600
9	LEG-24-09	Cycle for Main stand φ17×φ23	1	¥100
10	LEG-24-10	Pin 3×30	1	¥200

SWING ARM & CHAIN BOX

LG150 FI - 25

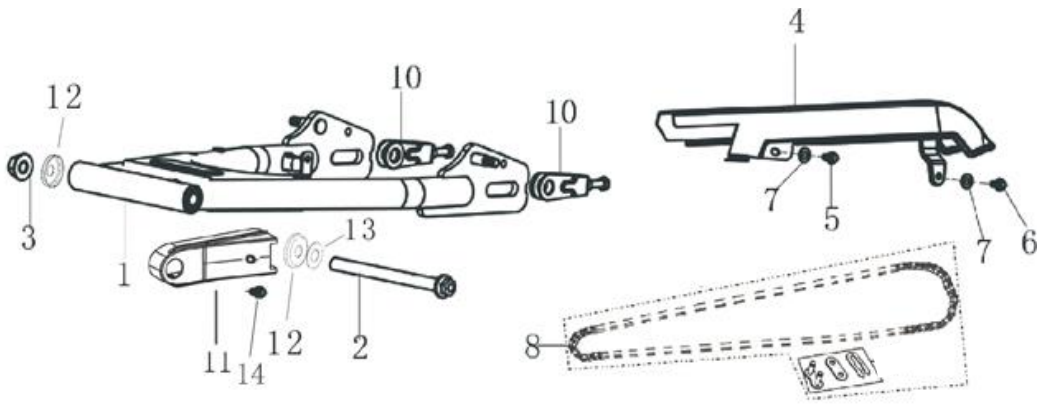

NO	GPX CODE	ENGLISH DESCRIPTION	QTY (PCS)	Price (UNIT)
1	150-25-0101-GW	Swing arm	1	¥22,000
2	LEG-25-02	Swing arm axle	1	¥700
3	LEG-30-01	All-metal hexagonal flange locking Nut M14×1.5	1	¥300
4	LEG-25-04	Chain box	1	¥3,200
5	LEG-25-05	Hexagonal flange bolt M6×10	1	¥100
6	250-19-1301	Hexagonal flange bolt M6×16	1	¥100
7	LEG-19-11	WASHER Φ6	2	¥100
8	150-25-0801-TH	CHAIN,DRIVE 428-122 LE O-RING	1	¥5,900
10	LEG-25-10-01	Chain adjuster	2	¥800
11	250-29-1101	Chain guide	1	¥3,400
12	250-29-1201	Swing arm dust protect	2	¥400
13	250-29-1301	Swing arm washer for adjust	1	¥200
14	250-19-2301	Hexagonal flange bolt,M6×12	1	¥100
15	LEG150S-25-14	Swing arm break rod	1	¥1,100

MUFFLER ASSY

LG150 FI - 26

PICTURE

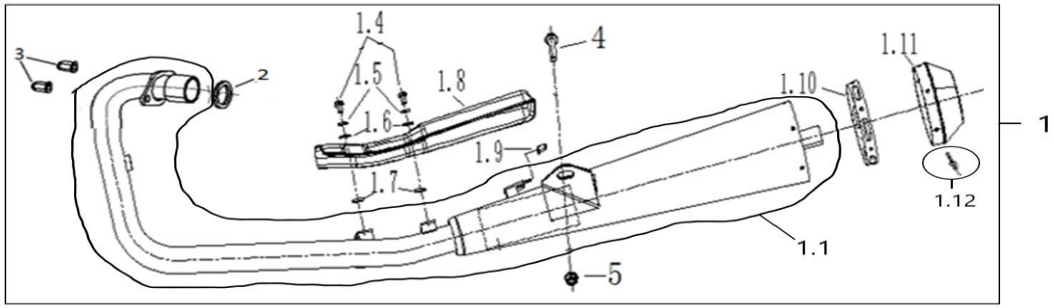

NO	GPX CODE	ENGLISH DESCRIPTION	QTY (PCS)	Price (UNIT)
1	150-26-0101-GW	Muffler assy	1	-
1.1	150-26-01101-GW	Muffler body only	1	-
1.4	150-26-01401	Cross large flat head screw,Stainless steel screw,M6	2	¥100
1.5	150-26-01501	Spring washer φ6	2	¥100
1.6	150-26-01601	Washer 6	2	¥100
1.7	250-30-02.801	Heater protect washer	2	¥100
1.8	250-30-02.601	Muffler heater protect	1	¥2,700
1.9	250-30-02.701	H rubber for muffler	1	¥100
1.10	250-30-02.901	Muffer tail cover clip	1	¥300
1.11	250-30-02.1001	Muffer tail decoration cover	1	¥2,600
1.12	250-30-02.1101	Rivt Φ5×10	6	¥100
2	LEG-26-02	Muffler rings	2	¥300
3	150-26-0301	Bolt M8x40	2	¥200
4	250-30-0401	Hexagonal flange bolt M10×1.25×45	1	¥200
5	250-30-0501	All-metal hexagonal flange locking nut M10×1.25	1	¥100

SEAT & SEAT COVER

LG150 FI - 27

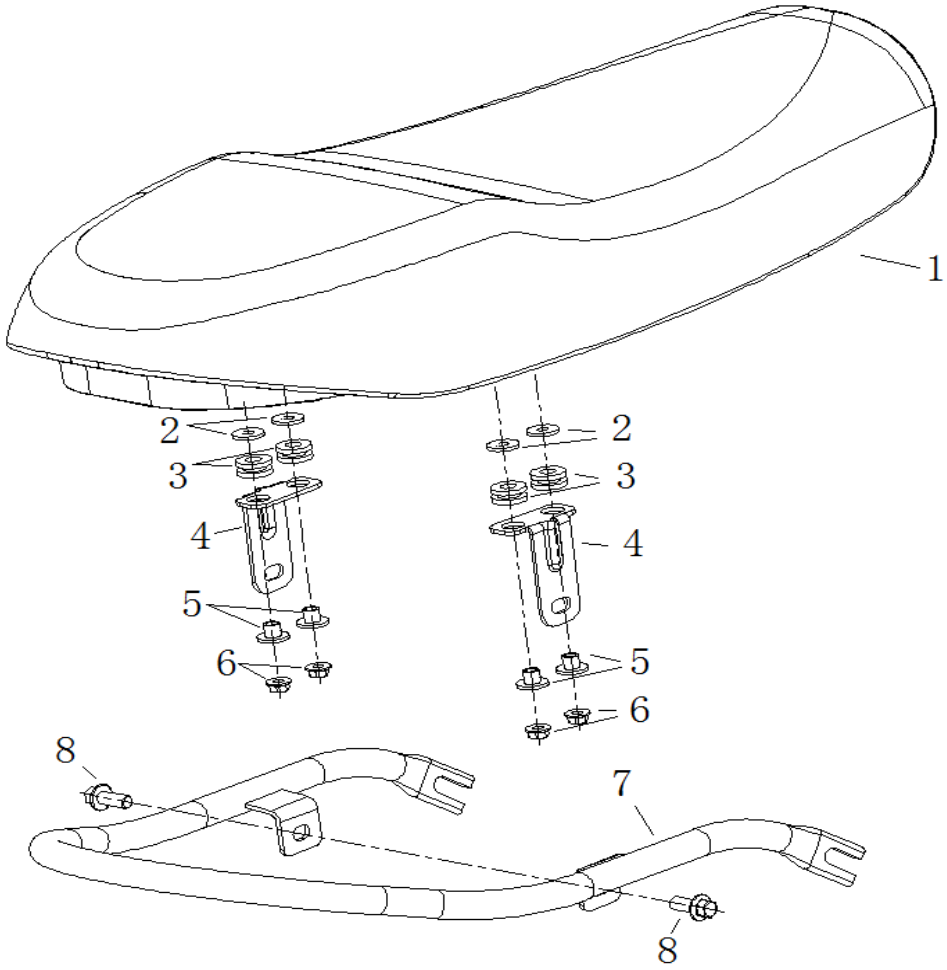

NO	GPX CODE	ENGLISH DESCRIPTION	QTY (PCS)	Price (UNIT)
1	150-27-0101	SEAT	1	¥11,000
2	LEG-19-11	WASHER Φ6	4	¥100
3	250-19-2101	H rubber	4	¥100
4	150-27-0401	BRACKET FOR SEAT	2	¥600
5	250-19-2201	BUSH Φ6.5×10/Φ18×2+Φ8.5×8	4	¥300
6	LEG-29-14	HEXAGONAL FLANGE NUT M6	4	¥100
7	150-27-0701	RR. ARM REST	1	¥5,100
8	LEG-27-06	HEXAGONAL FLANGE BOLT M8×20	2	¥100

REAR SHOCK

LG150 FI - 28

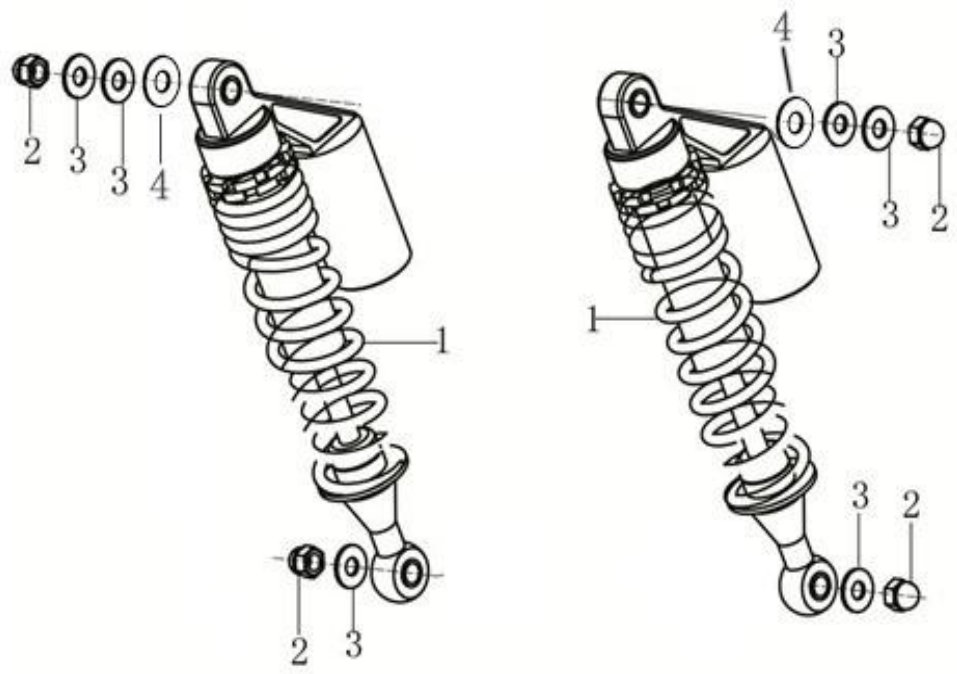

NO	GPX CODE	ENGLISH DESCRIPTION	QTY (PCS)	Price (UNIT)
1	150-28-0101-TH	REAR SHOCK	1	¥14,000
2	LEG-28-02	NUT M10*1.25	4	¥200
3	LEG-28-03	WASHER 10	6	¥100
4	LEG-28-04	WASHER 12	2	¥100

REAR FENDER

LG150 FI - 29

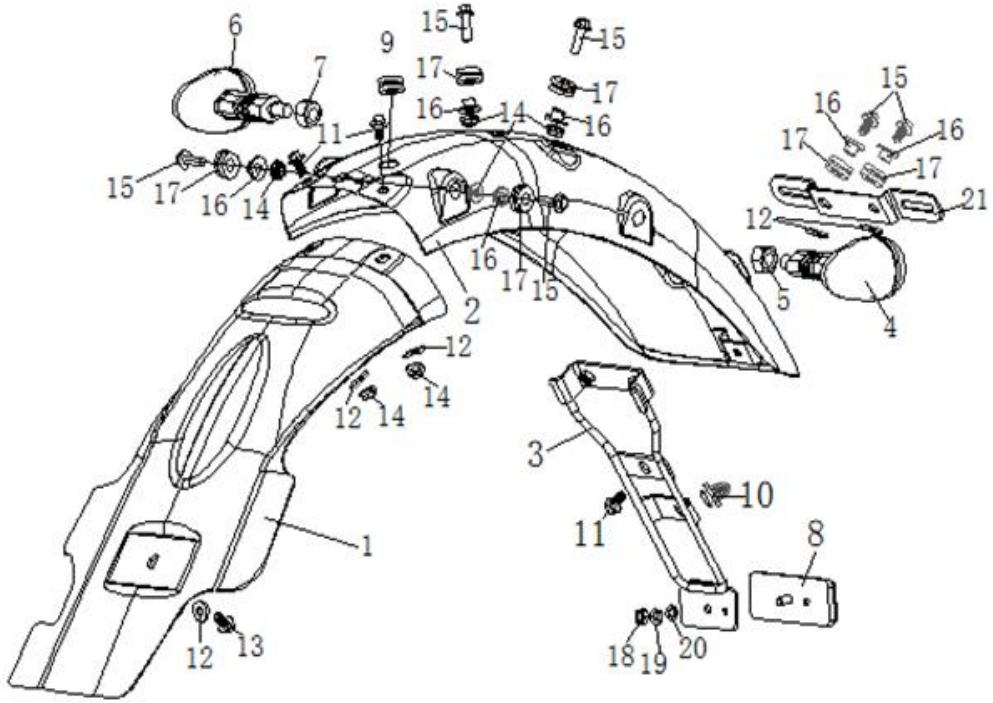

NO	GPX CODE	ENGLISH DESCRIPTION	QTY (PCS)	Price (UNIT)
1	LEG-29-01	Rr.fender A	1	¥1,200
2	250-33-0201-BLK	Rr. Fender B, Gross Black	1	¥8,000
2	250-33-0202-BLK2	Rr. Fender B, MATT Black	1	¥8,000
2	250-33-0202-SIL1	Rr.fender,Rr SIL	1	¥8,000
3	250-33-0301	Rr.reflector bracket	1	¥1,600
4	250-33-0401	Rr. Turning light LH.	1	¥1,400
5	LEG-17-14	Hexagon flange Nut M12, GB6177-2000	1	¥100
6	250-33-0601	Rr. Turning light RH.	1	¥1,400
7	LEG-17-14	Hexagon flange Nut M12, GB6177-2000	1	¥100
8	LEG-29-08	Rr. Reflector	1	¥400
9	LEG-29-17	H rubber	1	¥200
10	250-33-1001	Rubber for rear licence pleat	1	¥100
11	250-19-2301	Hexagonal flange bolt,M6×12	3	¥100
12	LEG-19-11	WASHER Φ6	5	¥100
13	LEG-29-13	Hexagonal flange bolt M6×16	1	¥100
14	LEG-29-14	Hexagon flange Nut M6, GB6177-2000	6	¥100
15	LEG-29-15	Hexagonal flange bolt M6×20	6	¥100
16	250-19-2201	BUSH Φ6.5×10/Φ18×2+Φ8.5×8	6	¥300
17	250-19-2101	H rubber	6	¥100
18	LEG-19-09	Hexagonal flange nut M6	1	¥100
19	LEG-19-10	Spring washer φ6	1	¥100
20	LEG-19-11	WASHER Φ6	1	¥100
21	250-33-2101	Bracket for Rr. Plate	1	¥600
22	250-33-2201-TH	Foam for rear fender, aviod touched the frame	1	¥300

REAR WHEEL

LG150 FI - 30

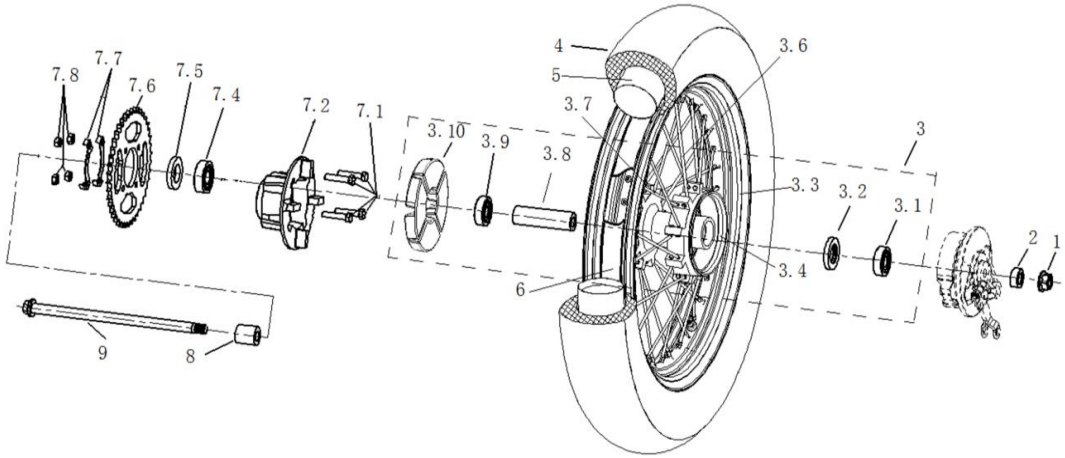

NO	GPX CODE	ENGLISH DESCRIPTION	QTY (PCS)	Price (UNIT)
1	150-30-0101	All-metal hexagonal flange locking nut M14×1.5	1	¥100
2	LEG150S-30-12	Rear wheel bush, RH	1	¥300
3	LEG150S-30-07	Rr. wheel assy.	1	¥22,000
3.1	150-30-03101	Bearing 6202	1	¥800
3.2	150-30-03201	SEAL	1	-
3.3	LEGB200-30-20-TH	Rear Ring only 3.00x17	1	¥12,000
3.4	LEG150S-30-07.1	Rear wheel hub only	1	¥10,000
3.6	LEG150S-30-24	Spoke & Nipple Out	18	¥200
3.7	LEG150S-30-23	Spoke & Nipple In	18	¥200
3.8	150-30-03801	Bush	1	¥700
3.9	LEG150S-30-09	Bearing 6202	1	¥800
3.10	LEG150S-30-22	Damper set wheel	4	¥1,100
4	LEG150S-30-26-TH	REAR WHEEL OUTER TIRE 120/90-17	1	¥27,000
5	LEG150S-30-27-TH	RR. WHEEL INNER TIRE 120/90-17	1	¥2,600
6	LEG-TRR-TH	Flap,tyre	1	¥400
7.1	LEG-30-13	Rr. Sprocket bolt	4	¥200
7.2	150-30-07201	Rr. Sprocket body parts	1	¥4,100
7.4	250-34-12.501	Bearing 6204R	1	¥900
7.5	150-30-07501	Seal 27×47×7	1	¥200
7.6	150-30-07601	Rr. Sprocket 428-50	1	¥3,200
7.7	250-34-12.801	Limiting plate	2	¥100
7.8	250-20-9.402	All-metal hexagonal flange locking nut M8×1.25	4	¥100
8	250-12-0201	Rear wheel bush, LH	1	¥1,300
9	250-34-1401	Rear wheel axle	1	¥1,600

REAR BREAK ASSY

LG150 FI - 31

PICTURE

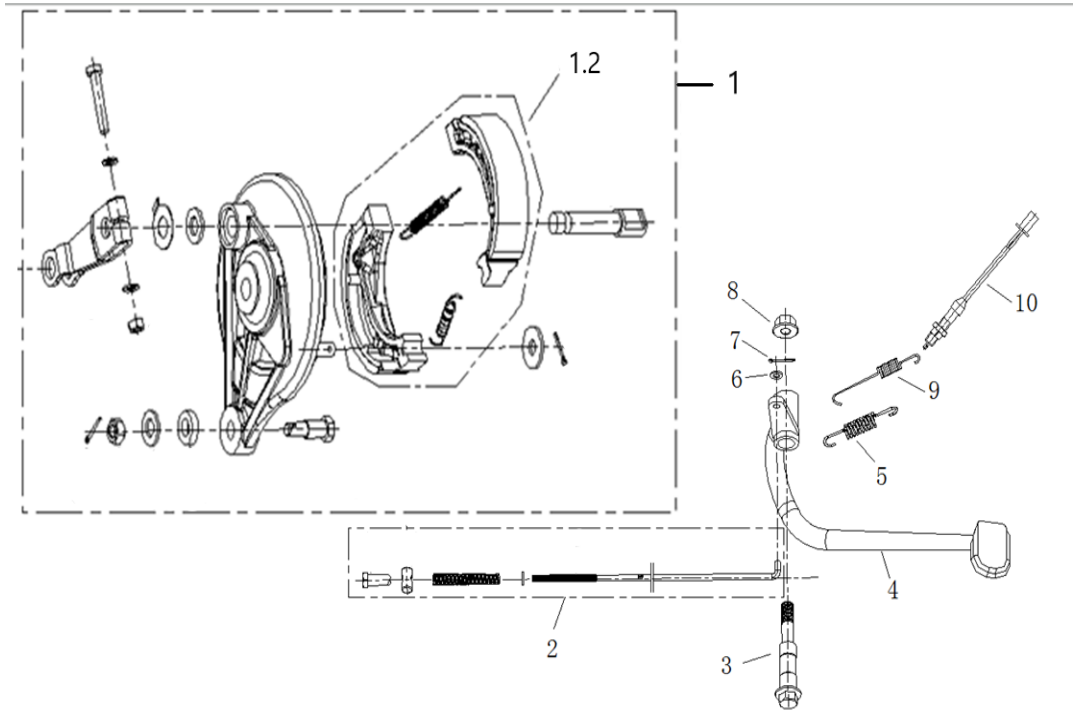

NO	GPX CODE	ENGLISH DESCRIPTION	QTY (PCS)	Price (UNIT)
1	150-31-0101	RR.Brake Assy	1	¥22,000
1.2	LEG150S-31-02	Rr. drum break shoe	1	¥1,400
2	150-31-0201	Rear break rod	1	¥500
3	250-13-0801	Rr. Break arm axle	1	¥100
4	150-31-0401	Rear break pedal	1	¥1,200
5	LEG-31-09	Spring for rear break padel	1	¥200
6	701-35-0601	Washr φ6	1	¥100
7	701-35-0501	Pin 2 x 20	1	¥100
8	150-31-0801	All-metal hexagonal flange locking nut M12×1.25	1	¥100
9	LEG150S-31-14	Rear break spring	1	¥100
10	LEG150S-31-13	Rear break switch	1	¥1,700

TAIL LIGHT

LG150 FI - 32

PICTURE

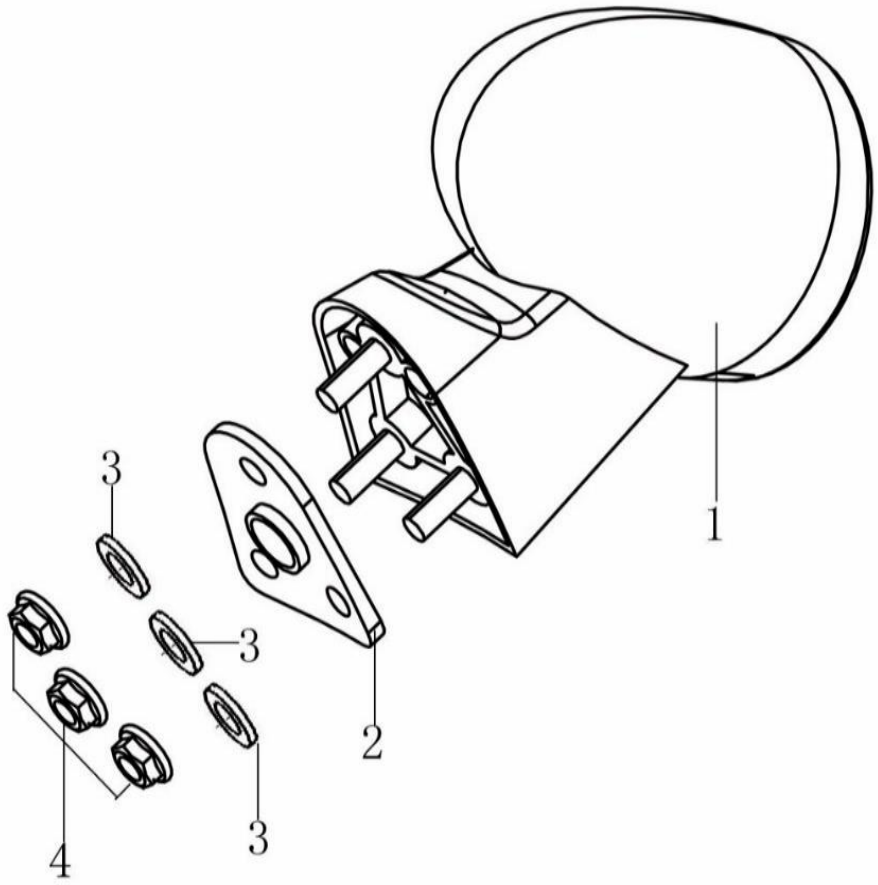

NO	GPX CODE	ENGLISH DESCRIPTION	QTY (PCS)	Price (UNIT)
1	250-36-0101	Tail light	1	¥4,300
2	250-36-0201	Rubber for tail light	1	¥300
3	LEG-19-11	WASHER Φ6	3	¥100
4	LEG-29-14	Hexagon flange Nut M6, GB6177-2000	3	¥100

FRAME & FOOTREST

LG150 FI - 33

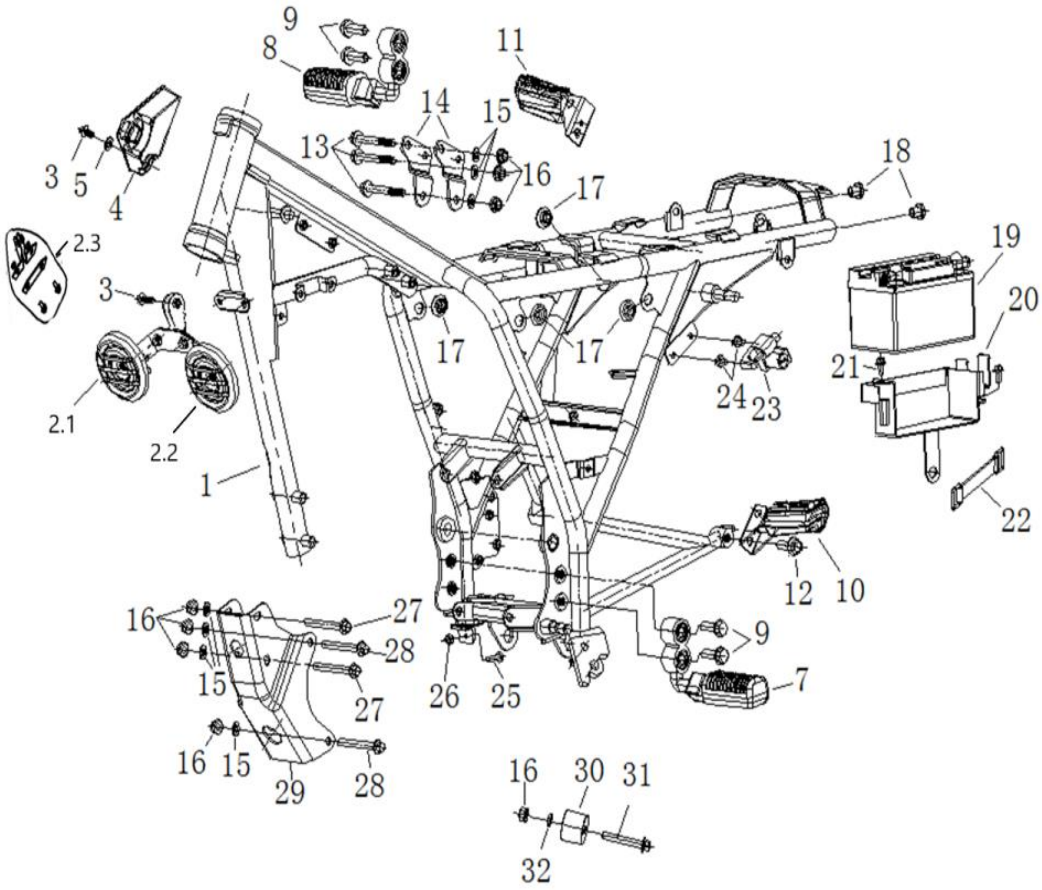

NO	GPX CODE	ENGLISH DESCRIPTION	QTY (PCS)	Price (UNIT)
1	150-33-0101-GW	Frame	1	¥72,000
2.1	250-37-0401-H-TH	ALTHORN E-Mark High	1	¥1,300
2.2	250-37-0401-L-TH	SACKBUT E-Mark Low	1	¥1,300
2.3	250-37-04.102	Horn bracket only	1	¥1,600
3	250-19-1301	Hexagonal flange bolt M6×16	1	¥100
4	LEG-33-25	Tool box	1	¥600
5	701-24-1701	Washr φ6	1	¥100
7	LEG-33-14	Fr. footrest LH	1	¥2,400
8	LEG-33-15	Fr. footrest RH	1	¥2,400
9	150-33-0901	Hexagon headed bolt M10×1.25×30	1	¥100
10	LEG-33-16	Rr. Footrest assy RH.	1	¥1,900
11	LEG-33-17	Rr. Footrest assy RH.	1	¥1,900
12	150-33-1201	Hexagon headed bolt M10×1.25×16	1	¥100
13	250-37-1001	Hexagon headed bolt M8×65	1	¥200
14	LEG150-33-06	Engine connect bracket upper,with painting	1	¥800
15	LEG-33-07	Washer	1	¥100
16	250-20-9.402	All-metal hexagonal flange locking nut M8×1.25	1	¥100
17	LEG-33-13	Side cover rubber	3	¥100
18	250-37-1201	Plug 007000	1	¥200
19	120-21-2301-TH	Battery 7AH YUSA	1	¥9,700
20	250-37-2001	Bracket for battery	1	¥1,300
21	CR5-38-16	Battery tape	1	¥300
22	CR5-38-16	Battery tape	6	¥300
24	LEG-25-05	Hexagonal flange bolt M6×10	2	¥100
25	150-33-2501	Bolt M6×30	2	¥100
26	150-31-01901	Nut M6	2	¥100
27	LEG-33-10	Hexagon headed bolt M8×70	2	¥200
28	LEG-33-11	Hexagon headed bolt M8×90	2	¥200
29	LEG-33-09	Engine connect plate Fr.,with painting	1	¥800
30	250-37-3501	Chain tensioner	1	¥1,500
31	250-37-3601	Hexagon headed bolt M8×55	1	¥100
32	250-37-3401	Chain tensioner bush	2	¥200

CARBURATOR / OIL COOLER

LG150 FI - 34

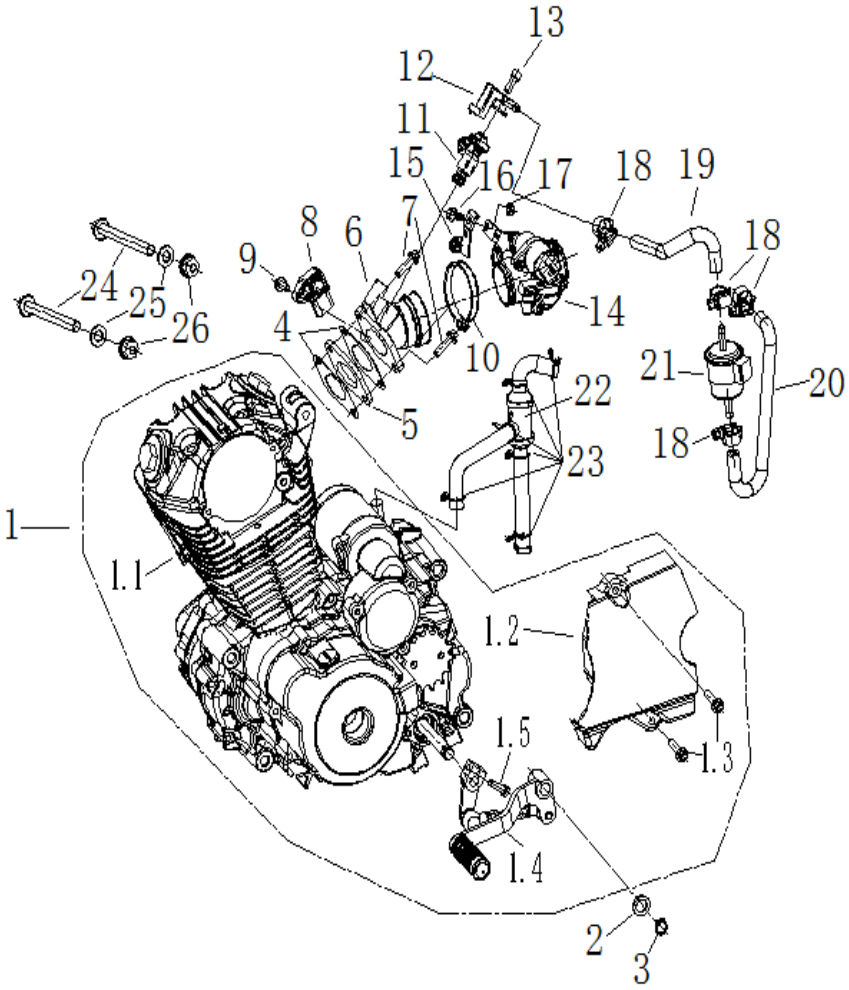

PICTURE	NO	GPX CODE	ENGLISH DESCRIPTION	QTY (PCS)	Price (UNIT)
	1.1	150-34-0101	Engine 149cc	1	¥200,000
	1.2	LEG200-13-01	Driving sprocket cover	1	¥3,600
	1.4	LEG-34-05	Gear shaft pedal	1	¥3,400
	1.5	CR5-13-05	Hexagonal bolt GB/T 5783 M6×20	1	¥100
	2	150-34-0201	Washer Φ12×Φ20×2	1	¥100
	3	150-34-0301	External Circlips φ12	1	¥100
	4	150-34-0401	Gasket	2	¥100
	5	150-34-0501	Intake pipe heat insulation gasket	1	¥100
	6	150-34-0601	Air intake pipe	1	¥4,700
	7	250-20-1201	Hexagonal flange bolt,M6×25,GB/T 16674.1-2004	2	¥100
	8	150-34-0801	Intake air pressure sensor	1	¥12,000
	9	250-19-1301	Hexagonal flange bolt M6×16	1	¥100
	10	250-15-0701	Clamp 051000	1	¥300
	11	150-34-1101	Injector	2	¥14,000
	12	150-34-1201	Oil injector cap	1	¥1,200
	13	250-20-02.201	socket head cap screws GB/T70.1 M6×16	1	¥200
	14	150-34-1401	Throttle body assy	1	¥21,000
	15	150-34-1501	bracket for RH side decorative cover	1	¥600
	16	250-19-2301	Hexagonal flange bolt,M6×12	1	¥100
	17	150-31-01901	Nut M6	1	¥100
	18	150-34-1801	Clip Φ27-Φ51/W=9	3	¥300
	19	150-34-1901	Fuel pipe B	1	¥1,500
	20	150-34-2001	Fuel pipe A	1	¥2,600
	21	250-16-0901	Fuel filter	1	¥100
	22	150-34-2201	Exhaust gas recovery device	1	¥900
	23	250-38-2201	Oil pipe clip	6	¥100
	24	250-38-2501	Hexagon headed bolt M10×115×1.25	2	¥300
	25	250-38-2601	Washr φ10	2	¥100
	26	250-30-0501	All-metal hexagonal flange locking nut M10×1.25	2	¥100

MAIN CABLE & ELECTRICAL PARTS

LG150 FI - 35

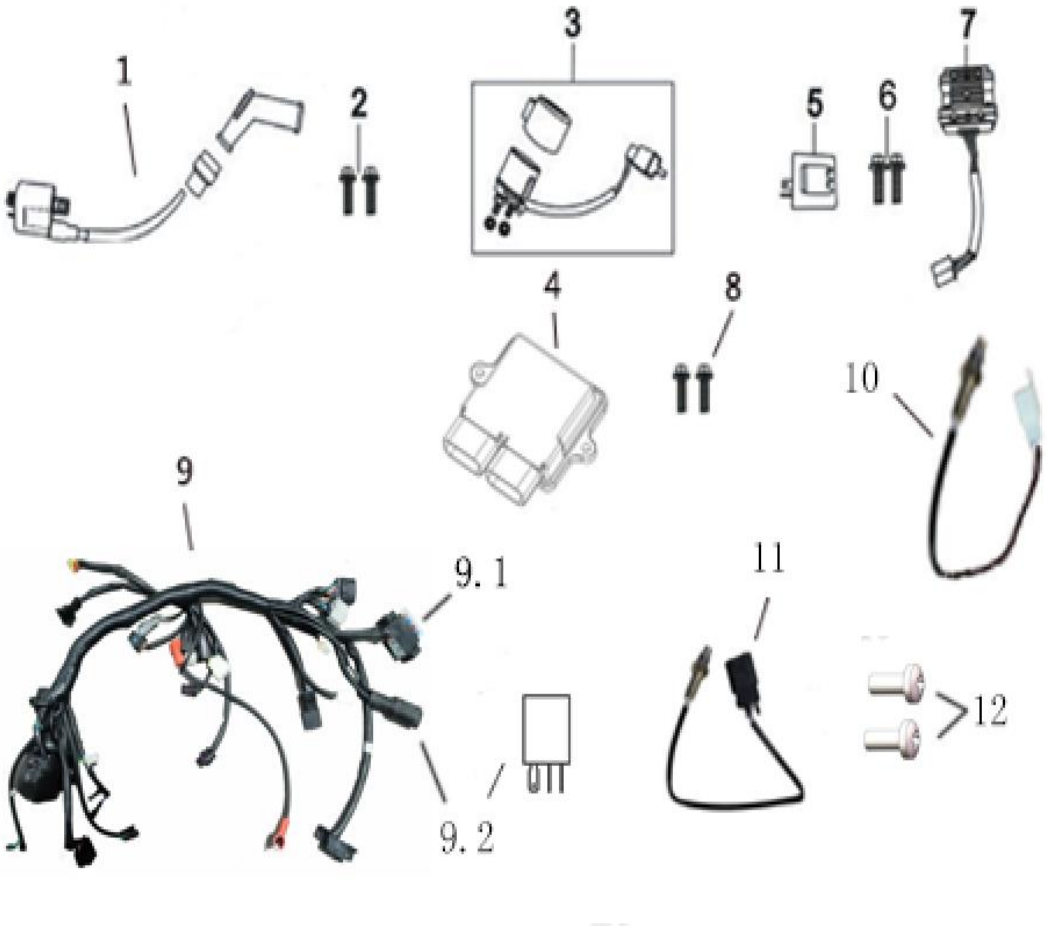

NO	GPX CODE	ENGLISH DESCRIPTION	QTY (PCS)	Price (UNIT)
1	150-35-0101	Ignition coil	1	¥2,600
2	250-19-1301	Hexagonal flange bolt M6×16	2	¥100
3	LEG-35-03	Start Relay	1	¥1,200
4	150-35-0401	ECU	1	¥44,000
5	LEG-35-05	Flsher	1	¥1,000
6	250-19-1301	Hexagonal flange bolt M6×16	2	¥100
7	150-35-0701	Rectifier	1	¥4,200
8	250-19-1301	Hexagonal flange bolt M6×16	2	¥100
9	150-35-0901-TH	Main Cable	1	¥19,000
11	LEG-35-09	Fuse	1	¥300
12	250-39-1601	Main relay	1	¥2,200
13	150-35-1001	Cylinder temperature sensor	1	¥2,600
14	150-35-1101	Oxygen sensor	1	¥13,000
15	250-27-1301	Cross recessed pan head tapping screws M5x12	2	¥100

AIR FILTER

LG150 FI - 36

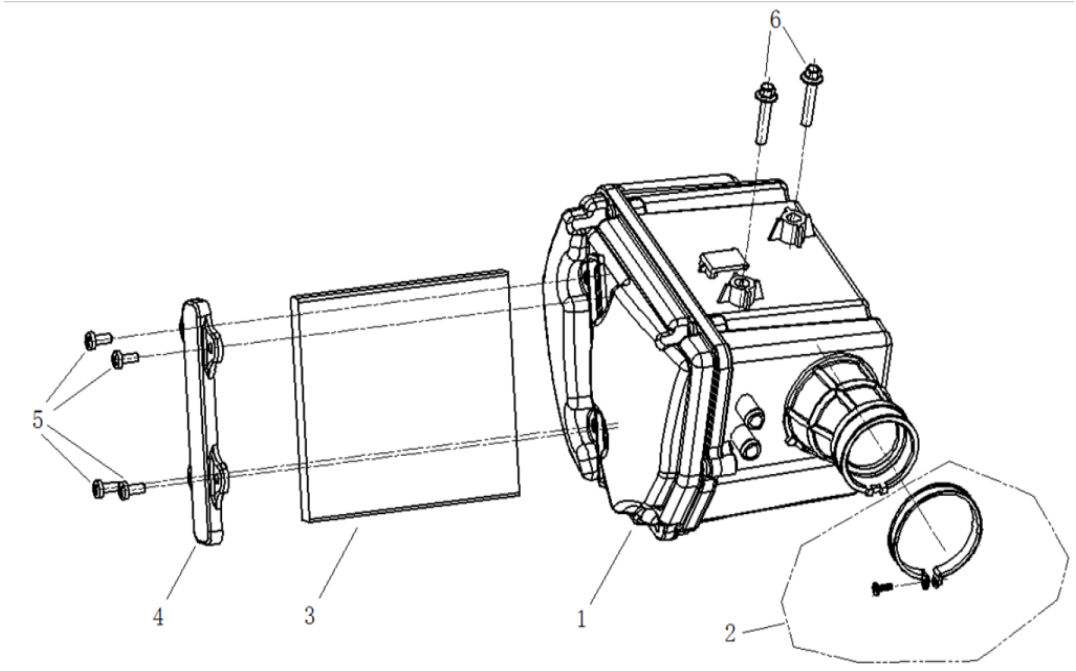

NO	GPX CODE	ENGLISH DESCRIPTION	QTY (PCS)	Price (UNIT)
1	150-36-0101	Air filter assy	1	¥3,300
2	250-40-0201	Air filte Clip, stainless	1	¥300
3	LEG-36-04	Air filter	1	¥900
4	LEG-36-05	filter corn,air clearner	1	¥1,200
5	250-19-1301	Hexagonal flange bolt M6×16	4	¥100
6	250-19-1301	Hexagonal flange bolt M6×16	2	¥100

TOOLS

LG150 FI - 37

PICTURE

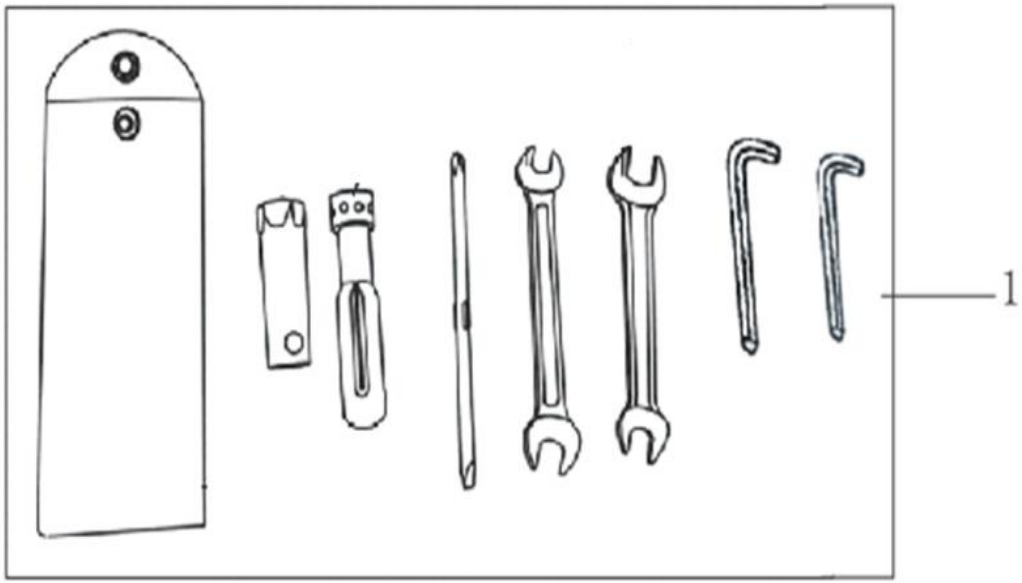

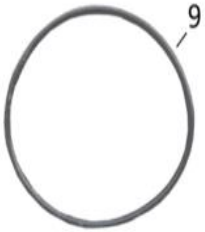

NO	GPX CODE	ENGLISH DESCRIPTION	QTY (PCS)	Price (UNIT)
1	250-41-0101	Tool kits	1	¥900
9	250-41-0901	Toolbox band	1	¥200